PROJECT TEAM

OWNER
RALPH & KATHARINE BRINDLEY
8474 - 85TH AVE. SE
MERCER ISLAND, WA 98040
(206) 369-5329
kbrindley@bbllaw.com

ARCHITECT
STUART SILK ARCHITECTS
2400 N 45TH ST., SUITE 200
SEATTLE, WA 98103
CONTACT: ERIC HENYEY, AIA
(206) 728-9500 x115
eric@stuartsilk.com

LANDSCAPE ARCHITECT
RAGEN & ASSOCIATES
517 E PIKE ST., UPPER LEVEL
SEATTLE, WA 98122
CONTACT: CHIP RAGEN
(206) 329-4737
chip@ragenassociates.com

CONTRACTOR
TOTH CONSTRUCTION
220 S RIVER STREET
SEATTLE, WA 98108
WA LICENSE #TOTHCI*159NA
M.I. BUSINESS LICENSE #930192
CONTACT: RYAN RANTZ
(206) 242-9093
ryanr@tothconstruction.com

ARBORIST
SUPERIOR NW ENTERPRISES
13110 NE 177TH PL., SUITE 304
WOODINVILLE, WA 98072
CONTACT: ANTHONY MORAN
(206) 930-5724
anthony@superiornw.com

CIVIL ENGINEER
HL ENGINEERING
P.O. BOX 81211
SEATTLE, WA 98108
CONTACT: PATRICK HANSEN-LUND, PE
(858) 581-0754
patrick@hl.engineering.com

GEOTECHNICAL ENGINEER
GEOTECH CONSULTANTS
2401 - 10TH AVE. E
SEATTLE, WA 98102
CONTACT: ROB WARD
(425) 747-5618
robw@geotechnw.com

STRUCTURAL ENGINEER
QUANTUM CONSULTING ENGINEERS
1511 THIRD AVE., SUITE 323
SEATTLE, WA 98101
CONTACT: SANDRO KODAMA, PE, SE
(206) 957-3907
skodama@quatumce.com

SURVEYOR
TERRANE
10801 MAIN ST., SUITE 102
BELLEVUE, WA 98004
(425) 458-4488
support@terrane.net

ALARM CONSULTANT
SIGNATURE AUDIO & VIDEO
227 BELLEVUE WAY NE, SUITE 588
BELLEVUE, WA 98004
CONTACT: DENNY STEVENS
(425) 818-9004
denny@signatureav.com

ELECTRICIAN
MAPLE VALLEY ELECTRIC
26828 MAPLE VALLEY HWY. PMB 275
MAPLE VALLEY, WA 98038
WA LICENSE #MAPLEVE904D5
M.I. BUSINESS LICENSE #060552
CONTACT: TYLER MICHAM
(425) 894-1772
tyler@maplevalleyelectric.com

PLUMBER
BEST PLUMBING GROUP
8820 AURORA AVE. N
SEATTLE, WA 98103
WA LICENSE #BESTPPG797MF
M.I. BUSINESS LICENSE #980181
CONTACT: BRANDIN MOODY
(206) 240-1401
brandin.m@bestplumbing.com

SOLAR CONSULTANT
PUGET SOUND SOLAR
805 RAINIER AVE. S
SEATTLE, WA 98144
CONTACT: ROY FOSTER
(206) 947-7312
roy@pugetsoundsolar.com

SPRINKLER DESIGNER
WESTERN STATES FIRE PROTECTION
14690 NE 95TH ST., SUITE 101
REDMOND, WA 98052
CONTACT: COREY SISSON
(425) 736-9032
corey.sisson@wsfp.us

PROPERTY DATA

PROJECT LOCATION
ADDRESS TO BE DETERMINED
78XX - 79TH AVE. SE
MERCER ISLAND, WA 98040

LOT AREA
27,465 SF

ASSESSOR'S TAX NUMBER
PARCEL NO. 320600-0050

LEGAL DESCRIPTION
LOT 5 OF HEADS ADDITION TO MERCER ISLAND, AS PER PLAT RECORDED IN VOLUME 69 OF PLATS, PAGE 65, RECORDS OF KING COUNTY, WASHINGTON.

SITUATE IN THE COUNTY OF KING, STATE OF WASHINGTON.

ZONING DESIGNATION
R-15

SETBACKS (MICC 19.02.020 C)
FRONT YARD: 20'
REAR YARD: 25'
LOT WIDTH: 140' (REFER TO 4/A-1.0)
SIDE YARDS, TOTAL: 17% X 140' = 23'-10"
SIDE YARD, MIN.: 33% X 23'-10" = 7'-10"

LOT SLOPE
LOWEST ELEVATION: 318'
HIGHEST ELEVATION: 324'
DISTANCE BETWEEN ELEVATIONS: 157'
SLOPE: (324' - 318') / 157' = 4%

BENCHMARK
NAIL/WASHER SET IN R.O.W. 02/25/22
REFER TO SURVEY
ELEVATION = 318.23'

PROJECT DATA

SCOPE OF WORK
CONSTRUCTION OF A NEW ONE-STORY SINGLE-FAMILY RESIDENCE, WITH AN ATTACHED GARAGE, ON A PREVIOUSLY UNDEVELOPED LOT.

BUILDING CODE COMPLIANCE
ALL WORK SHALL COMPLY WITH THE 2018 WASHINGTON STATE RESIDENTIAL CODE (WSRC).

DEFERRED SUBMITTALS
13R SPRINKLER SYSTEM
MONITORED FIRE ALARM SYSTEM

AREA SUMMARY (REFER TO 5/A-1.0)

CONDITIONED, CLG. < 12'	5,250 SF
CONDITIONED, CLG. 12'-16'	387 SF
CONDITIONED, CLG > 16'	0 SF
SUBTOTAL, CONDITIONED	5,637 SF
GARAGE	785 SF
OUTDOOR STORAGE	34 SF
SUBTOTAL, UNCONDITIONED	819 SF
PORTICO	114 SF
COVERED TERRACE	616 SF
SUBTOTAL, EXTERIOR	730 SF
TOTAL BUILDING FOOTPRINT (TO EXTERIOR F.O. WALLS)	7,186 SF

ZONING DATA

GROSS FLOOR AREA (MICC 19.02.020 D)

PROPOSED

CLG. < 12':	5,250 SF
CLG. 12'-16': 387 SF X 150% =	581 SF
CLG. > 16': 0 SF X 200% =	0 SF
TOTAL	5,831 SF

5,831 SF / 27,465 SF = 21%

ALLOWED
40% X 27,465 SF = 10,986 SF ***OK***

BUILDING HEIGHT (MICC 19.02.020 E)

PROPOSED (REFER TO A-3.0 & A-3.1)

T.O. ROOFING =	338' - 7 3/4"
RIDGE VENT =	2'
T.O. RIDGE =	338' - 9 3/4" (338.81')

ALLOWED
30' ABOVE AVERAGE BLDG. ELEV.

AVERAGE BUILDING ELEV. 320' - 11 1/4" (REFER TO 6/A-1.0)

320' - 11 1/4" + 30' = 350' - 11 1/4" ***OK***

LOT COVERAGE (MICC 19.02.020 F)

PROPOSED (REFER TO 4/A-1.0)

ROOF AREA:	7,896 SF
DRIVING SURFACES:	2,120 SF
TOTAL	10,016 SF

10,016 SF / 27,465 SF = 36.5%

ALLOWED
SLOPE < 15%: 40% OF LOT AREA
40% X 27,465 SF = 10,986 SF ***OK***

HARDSCAPE

PROPOSED (REFER TO C4.00 & 1/A-1.2)

PAVED WALKWAYS*	630 SF
CRUSHED ROCK PATHS	1,010 SF
LANDSCAPE WALL	87 SF
TOTAL	1,727 SF

*INCLUDES PORTIONS OF TERRACES EXTENDING BEYOND ROOF

1,727 SF / 27,465 SF = 6.3%

ALLOWED
9% X 27,465 SF = 2,472 SF ***OK***

ENERGY DATA

ENERGY CODE COMPLIANCE
ALL WORK SHALL COMPLY WITH THE 2018 WASHINGTON STATE ENERGY CODE (WSEC).

ENERGY CODE CREDITS (WSEC R406)

CREDITS REQUIRED (LARGE DWELLING UNIT)	7.0
FUEL NORMALIZATION SYSTEM TYPE 1: COMBUSTION HEATING EQUIP.	0.0
OPTION 1.3: EFFICIENT BUILDING ENVELOPE	0.5
OPTION 3.1: HIGH EFFICIENCY HVAC EQUIPMENT	1.0
OPTION 4.1: HIGH EFFICIENCY HVAC DISTRIBUTION SYSTEM	0.5
OPTION 5.5: EFFICIENT WATER HEATING	2.0
OPTION 6.1: RENEWABLE ELECTRIC ENERGY (3600 KWH)	3.0
TOTAL CREDITS PROVIDED	7.0

BUILDING ENVELOPE U-VALUES AND R-FACTORS (ENERGY CREDIT 1.3)

VERTICAL FENESTRATION	U = 0.28 (MAX.)
SKYLIGHTS	U = 0.50 (MAX.)
CEILINGS	R-49 (MIN.)
VAULTED CEILINGS	R-38 (MIN.)
ABOVE-GRADE EXT. WALLS	R-21 INT. (MIN.)
HEADERS	R-10 (MIN.)
FLOORS	R-38 (MIN.)
BELOW-GRADE EXT. WALLS	R-10/15/21 INT. + 5TB (MIN.)
SLABS ON GRADE	R-10 (MIN.), PERIMETER & UNDER ENTIRE SLAB

GAS FURANCE (ENERGY CREDIT 3.1)
FURNACE SHALL BE ENERGY STAR RATED W/ AFUE OF 95% (MIN.).

HVAC EQUIPMENT & DUCTS (ENERGY CREDIT 4.1)
ALL SUPPLY AND RETURN DUCTS SHALL BE LOCATED IN CONDITIONED ATTIC.
DUCT LEAKAGE SHALL BE LIMITED TO 3 CFM PER 100 SF OF CONDITIONED FLOOR AREA.
AIR HANDLER(S) SHALL BE LOCATED WITHIN CONDITIONED SPACE.

ELECTRIC HEAT PUMP WATER HEATER (ENERGY CREDIT 5.5)
WATER HEATER SHALL MEET STANDARDS FOR TIER III OF NEEA'S ADVANCED WATER HEATING SPEC.

PHOTOVOLTAIC PANEL ARRAY (ENERGY CREDIT 6.1)

EQUIPMENT TYPE	(14) SUNPOWER 360W
SOLAR ACCESS	87.1% PER AURORA
ELECTRICAL GENERATION	4704 KWH/YEAR PER PVWATTS

REFER TO 1/A-2.3 AND DOCUMENTATION FROM SOLAR CONSULTANT

FIRE PROTECTION DATA

SPRINKLER SYSTEM
AN APPROVED 13R SPRINKLER SYSTEM WILL BE INSTALLED (DEFERRED SUBMITTAL).

FIRE ALARM SYSTEM
AN APPROVED MONITORED FIRE ALARM SYSTEM WILL BE INSTALLED (DEFERRED SUBMITTAL). FIRE ALARM SYSTEM SHALL COMPLY WITH MERCER ISLAND FIRE MARSHAL'S OFFICE "HOUSEHOLD FIRE ALARM STANDARD."

CODE ALTERNATES
PENDING APPROVAL FROM FIRE MARSHAL, TYPE 'X' DRYWALL AND SOLID CORE DOORS WILL BE USED IN EXIT PATHWAYS TO MITIGATE DEFICIENCIES IN EXISTING ACCESS ROAD.

CARBON MONOXIDE PROTECTION
AN APPROVED CARBON MONOXIDE ALARM SHALL BE INSTALLED IN DWELLING UNITS, PER SECTION R315.

NOTE: WHEN MORE THAN ONE CARBON MONOXIDE ALARM IS REQUIRED TO BE INSTALLED, THE ALARM DEVICES SHALL BE INTERCONNECTED IN SUCH A MANNER THANT THE ACTIVATION OF ONE ALARM WILL ACTIVATE ALL OF THE ALARMS IN THE UNIT.

VENTILATION DATA

SYSTEM DESIGN
THIS SYSTEM IS DESIGN/BUILD.

SYSTEM CRITERIA
TO BE DETERMINED

SYSTEM COMPONENTS
TO BE DETERMINED

SYSTEM FUNCTION
INTAKE BLOWER, AIR TEMPERING UNIT, AND EXHAUST FAN TO BE CONNECTED TO TIMER FOR SYNCHRONIZED, INTERMITTENT USE THROUGHOUT EACH DAY. FRESH AIR FROM THE EXTERIOR IS PULLED THROUGH AIR TEMPERING UNIT, THEN DISTRIBUTED THROUGH DUCTING TO ALL HABITABLE ROOMS. A BALANCED QUANTITY OF AIR IS SIMULTANEOUSLY EVACUATED FROM THE INTERIOR VIA THE EXHAUST FAN DUCTED TO THE EXTERIOR.

WHOLE HOUSE VENTILATION
PROVIDE WHOLE HOUSE VENTILATION SYSTEM DESIGNED IN ACCORDANCE WITH 2018 WASHINGTON STATE RESIDENTIAL CODE SECTIONS M1505.4.1 THROUGH M1505.4.4.

All drawings, specifications, plans, ideas, arrangements, and designs represented or referred to are the property of and owned by Stuart Silk Architects whether the project for which they are made is executed or not. They were created, evolved, developed and produced for the sole use on and in connection with this project and none of the above may be disclosed or given to or used by any person, firm, or corporation for any use or purpose whatsoever including any other project, except upon written permission of Stuart Silk Architects.

© COPYRIGHT 2022
STUART SILK ARCHITECTS

1 PERSPECTIVE VIEW

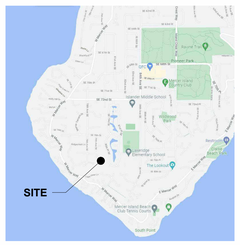

2 VICINITY MAP
NOT TO SCALE

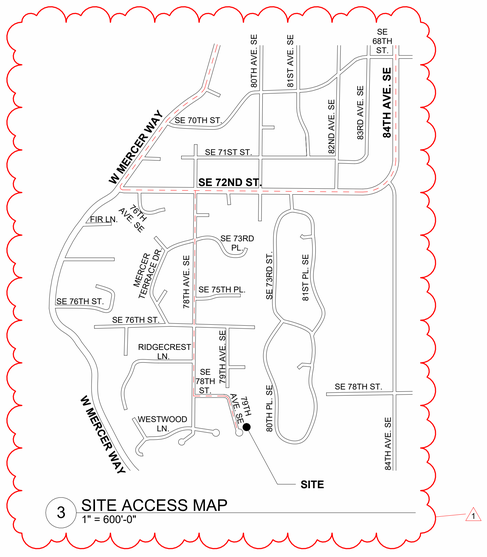

3 SITE ACCESS MAP
1" = 600'-0"

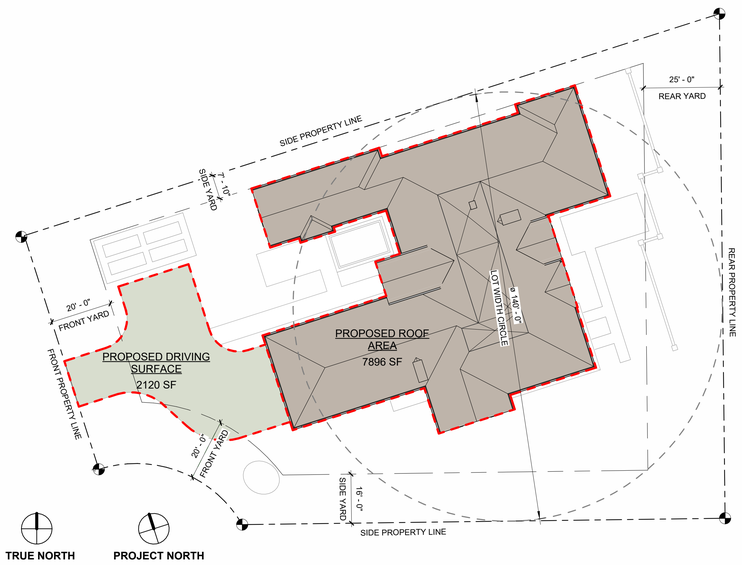

4 LOT COVERAGE DIAGRAM
1" = 20'-0"

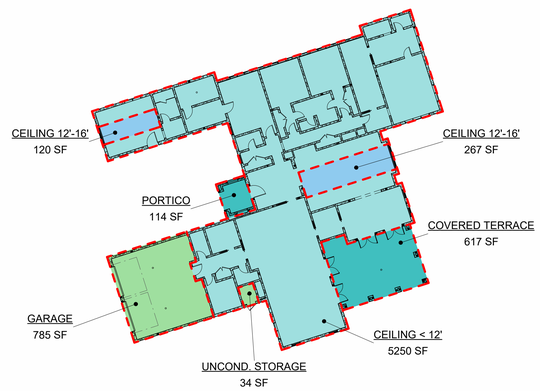

5 AREA SUMMARY
1" = 20'-0"

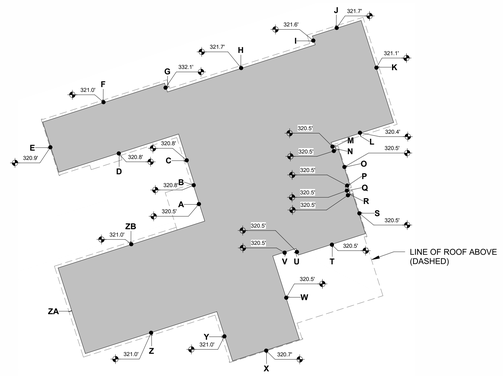

AVERAGE BUILDING ELEVATION

SEGMENT	WALL LENGTH	MIDPOINT ELEVATION	LENGTH x ELEV.
A	11.8	320.5	3765.9
B	0.5	320.8	153.7
C	17.9	320.9	5742.8
D	41.0	320.9	13156.9
E	17.2	320.9	5515.5
F	41.7	321.0	13395.1
G	3.0	321.6	964.8
H	50.6	321.6	16260.9
I	3.0	321.6	964.8
J	16.7	321.7	5368.4
K	32.3	321.1	10375.5
L	21.4	320.4	6861.9
M	2.9	320.5	934.8
N	1.6	320.5	520.8
O	12.1	320.5	3872.7
P	1.6	320.5	520.8
Q	3.1	320.5	981.5
R	1.6	320.5	520.8
S	13.7	320.5	4380.2
T	23.0	320.5	7378.2
U	2.3	320.5	721.1
V	8.0	320.5	2557.3
W	28.6	320.5	9174.3
X	22.9	320.7	7342.7
Y	16.9	321.0	5416.9
Z	45.0	321.0	14445.0
ZA	29.3	320.9	9406.4
ZB	50.2	321.0	16123.6
	519.8		166823.2

SUM OF LENGTHS = 519.8
SUM OF LENGTHS X MIDPOINT ELEVS. = 166823.2
166823.2 / 519.8 = 320.94' = 320' - 11 1/4"

6 AVERAGE BUILDING ELEVATION
1" = 20'-0"

SHEET INDEX

SHEET #	SHEET NAME
GENERAL	
A-1.0	PROJECT DATA
SURVEY	
-	TOPOGRAPHIC & BOUNDARY SURVEY
CIVIL	
C1.00	TEMP. EROSION & SEDIMENTATION CONTROL PLAN
C1.50	TEMP. EROSION & SEDIMENTATION CONTROL DTLS.
C1.60	TREE RETENTION PLAN
C2.00	SITE DEMOLITION PLAN
C3.00	SITE GRADING & PAVING PLAN
C4.00	STORMWATER SITE PLAN
C4.50	STORMWATER CONTROL DETAILS
C4.60	STORMWATER DETENTION SYSTEM DETAILS
C4.70	STORMWATER CONTROL DETAILS
C5.00	WATER, SEWER & DRY UTILITY PLAN
ARCHITECTURAL	
A-1.1	GENERAL NOTES
A-1.2	SITE PLAN
A-2.1	FLOOR PLAN
A-2.3	ROOF PLAN
A-3.0	EXTERIOR ELEVATIONS WEST & NORTH
A-3.1	EXTERIOR ELEVATIONS EAST & SOUTH
A-3.2	EXTERIOR ELEVATIONS MISCELLANEOUS
A-4.0	BUILDING SECTIONS LONGITUDINAL
A-4.1	BUILDING SECTIONS TRANSVERSE
A-5.0	WALL SECTIONS
A-6.0	DOOR & WINDOW SCHEDULES
A-7.0	DETAILS

SHEET #	SHEET NAME
STRUCTURAL	
S1.0	GENERAL STRUCTURAL NOTES
S1.1	GENERAL STRUCTURAL NOTES
S2.0	FOUNDATION PLAN
S2.1	ROOF FRAMING PLAN
S3.0	FOUNDATION DETAILS
S4.0	TYPICAL WOOD DETAILS
S4.1	TYPICAL DETAILS
S4.2	TYPICAL TRUSS DETAILS
S4.3	TYPICAL ROOF DETAILS
LANDSCAPE	
1 OF 1	PROPOSED TREE PLAN

3257
REGISTERED ARCHITECT
STUART TAYLOR SILK
STATE OF WASHINGTON

DESIGN	SNS, ESH
DRAWN	ESH
CHECKED	ANC
SHEET ISSUE DATE	03/07/22

DRAWING SETS
PRE-APPLICATION 09/23/21
PERMIT 03/07/22

REVISIONS

#	DATE	DESCRIPTION
1	07/29/22	PERMIT REVISIONS

Stuart Silk Architects
2400 N. 45th Street
Seattle, WA 98103
WWW.STUARTSILK.COM

BRINDLEY RESIDENCE

ADDRESS T.B.D.
78xx - 79TH AVE. SE
MERCER ISLAND,
WA 98040

PERMIT NO. 2203-116
PRICING DRAWINGS

PROJECT DATA

A-1.0

PLOT DATE: 7/29/2022 12:02:56 PM

TOPOGRAPHIC & BOUNDARY SURVEY

LEGAL DESCRIPTION

LOT 5 OF HEADS ADDITION TO MERCER ISLAND, AS PER PLAT RECORDED IN VOLUME 69 OF PLATS, PAGE 65, RECORDS OF KING COUNTY, WASHINGTON.

SITUATE IN THE COUNTY OF KING, STATE OF WASHINGTON.

BASIS OF BEARINGS

N 43°09'00" W BETWEEN SURVEY MARKERS FOUND AND HELD AS SHOWN HERON, AS CALCULATED PER R1.

REFERENCES

R1. HEAD'S ADDITION TO MERCER ISLAND, RECORDED IN VOL. 69 OF PLATS, PG. 65, RECORDS OF KING COUNTY, WASHINGTON.

VERTICAL DATUM

NAVD88 PER GPS OBSERVATIONS

SURVEYOR'S NOTES

1. THE TOPOGRAPHIC SURVEY SHOWN HEREON WAS PERFORMED IN APRIL OF 2021. THE FIELD DATA WAS COLLECTED AND RECORDED ON MAGNETIC MEDIA THROUGH AN ELECTRONIC THEODOLITE. THE DATA FILE IS ARCHIVED ON DISC OR CD. WRITTEN FIELD NOTES MAY NOT EXIST. CONTOURS ARE SHOWN FOR CONVENIENCE ONLY. DESIGN SHOULD RELY ON SPOT ELEVATIONS.
2. ALL MONUMENTS SHOWN HEREON WERE LOCATED DURING THE COURSE OF THIS SURVEY UNLESS OTHERWISE NOTED.
3. THE TYPES AND LOCATIONS OF ANY UTILITIES SHOWN ON THIS DRAWING ARE BASED ON INFORMATION PROVIDED TO US, BY OTHERS OR GENERAL INFORMATION READILY AVAILABLE IN THE PUBLIC DOMAIN INCLUDING, AS APPLICABLE, IDENTIFYING MARKINGS PLACED BY UTILITY LOCATE SERVICES AND OBSERVED BY TERRANE IN THE FIELD. AS SUCH, THE UTILITY INFORMATION SHOWN ON THESE DRAWINGS ARE FOR INFORMATIONAL PURPOSES ONLY AND SHOULD NOT BE RELIED ON FOR DESIGN OR CONSTRUCTION PURPOSES; TERRANE IS NOT RESPONSIBLE OR LIABLE FOR THE ACCURACY OR COMPLETENESS OF THIS UTILITY INFORMATION. FOR THE ACCURATE LOCATION AND TYPE OF UTILITIES NECESSARY FOR DESIGN AND CONSTRUCTION, PLEASE CONTACT THE SITE OWNER AND THE LOCAL UTILITY LOCATE SERVICE (800-424-5555).
4. SUBJECT PROPERTY TAX PARCEL NO. 3206000050.
5. SUBJECT PROPERTY AREA PER THIS SURVEY IS 27,465± S.F. (0.63 ACRES)
6. THE PROPERTY DESCRIBED HEREON IS THE SAME AS THE PROPERTY DESCRIBED IN FIDELITY NATIONAL TITLE COMPANY OF WASHINGTON, INC., COMMITMENT NO. 611275561, WITH AN EFFECTIVE DATE OF JANUARY 25, 2021 AND THAT ALL EASEMENTS, COVENANTS, AND RESTRICTIONS REFERENCED IN SAID TITLE COMMITMENT OR APPARENT FROM A PHYSICAL INSPECTION OF THE PROPERTY OR OTHERWISE KNOWN TO ME HAVE BEEN PLOTTED HEREON OR OTHERWISE NOTED AS TO THEIR EFFECT ON THE PROPERTY.
7. FIELD DATA FOR THIS SURVEY WAS OBTAINED BY DIRECT FIELD MEASUREMENTS WITH A CALIBRATED ELECTRONIC 5-SECOND TOTAL STATION AND/OR SURVEY GRADE GPS OBSERVATIONS. ALL ANGULAR AND LINEAR RELATIONSHIPS ARE ACCURATE AND MEET THE STANDARDS SET BY WAC 332-130-090.

LEGEND

	AREA DRAIN	PST	POST
	ASPHALT SURFACE	PT	POWER TRANSFORMER
	BUILDING		REBAR AS NOTED (FOUND)
BOL	BOLLARD		REBAR & CAP (SET)
	CENTERLINE ROW	SS	SEWER LINE
	FENCE LINE (CHAIN LINK)		SEWER MANHOLE
	FENCE LINE (WOOD)	SD	STORM DRAIN LINE
	FIRE HYDRANT	TEL SENTRY	TELEPHONE SENTRY
G	GAS LINE	SIZE TYPE	TREE (AS NOTED)
GV	GAS VALVE	W	WATER LINE
	INLET (TYPE 1)	WM	WATER METER
IP	IRON PIPE (FOUND)	WV	WATER VALVE
	MONUMENT (SURFACE, FOUND)		BENCHMARK

VICINITY MAP

N.T.S.

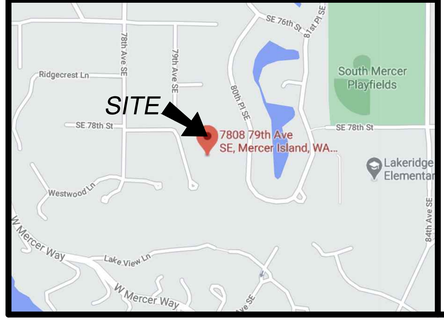

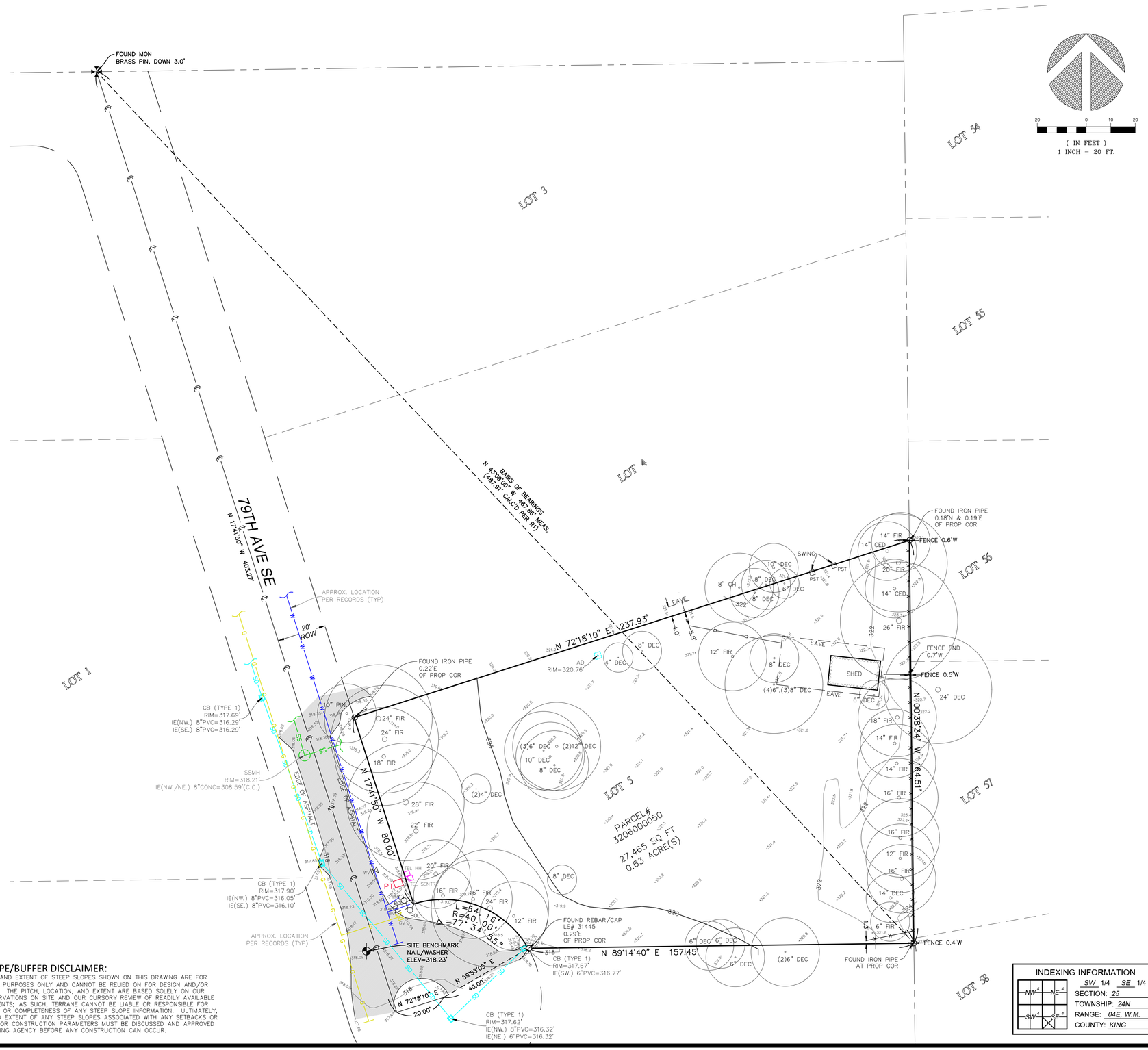

STEEP SLOPE/BUFFER DISCLAIMER:

THE LOCATION AND EXTENT OF STEEP SLOPES SHOWN ON THIS DRAWING ARE FOR INFORMATIONAL PURPOSES ONLY AND CANNOT BE RELIED ON FOR DESIGN AND/OR CONSTRUCTION. THE PITCH, LOCATION, AND EXTENT ARE BASED SOLELY ON OUR GENERAL OBSERVATIONS ON SITE AND OUR CURSORY REVIEW OF READILY AVAILABLE PUBLIC DOCUMENTS; AS SUCH, TERRANE CANNOT BE LIABLE OR RESPONSIBLE FOR THE ACCURACY OR COMPLETENESS OF ANY STEEP SLOPE INFORMATION. ULTIMATELY, THE LIMITS AND EXTENT OF ANY STEEP SLOPES ASSOCIATED WITH ANY SETBACKS OR OTHER DESIGN OR CONSTRUCTION PARAMETERS MUST BE DISCUSSED AND APPROVED BY THE REVIEWING AGENCY BEFORE ANY CONSTRUCTION CAN OCCUR.

INDEXING INFORMATION

SW 1/4 SE 1/4
SECTION: 25
TOWNSHIP: 24N
RANGE: 04E, W.M.
COUNTY: KING

measure success

TOPOGRAPHIC & BOUNDARY SURVEY
PARCEL NO. 3206000050

BRINDLEY RESIDENCE
XXXX 79TH AVE SE
MERCER ISLAND, WA 98040

09/08/22

Terrane
10801 Main Street, Suite 102, Bellevue, WA 98004
phone 425.458.4488 support@terrane.net
www.terrane.net

JOB NUMBER:	201537
DATE:	04/13/2021
DRAFTED BY:	RSN
CHECKED BY:	DRT/JGM
SCALE:	1" = 20'

REVISION HISTORY

03/08/22	SITE BENCHMARK

SHEET NUMBER
1 OF 1

CONSTRUCTION STORMWATER CONTROL GENERAL NOTES

1. ANY CHANGES TO THE APPROVED PLANS REQUIRES CITY APPROVAL THROUGH A REVISION.
2. APPLICANT IS RESPONSIBLE FOR ANY DAMAGES TO UNDERGROUND UTILITIES CAUSED FROM THIS CONSTRUCTION.
3. CATCH BASIN FILTERS SHOULD BE PROVIDED FOR ALL STORM DRAIN CATCH BASINS/INLETS DOWNSLOPE AND WITHIN 500 FEET OF THE CONSTRUCTION AREA. CATCH BASIN FILTERS SHOULD BE DESIGNED BY THE MANUFACTURER FOR USE AT CONSTRUCTION SITES AND APPROVED BY THE CITY INSPECTOR. CATCH BASIN FILTERS SHOULD BE INSPECTED FREQUENTLY, ESPECIALLY AFTER STORM EVENTS. IF THE FILTER BECOMES CLOGGED, IT SHOULD BE CLEANED OR REPLACED.
4. CONTRACTORS SHALL VERIFY LOCATIONS AND DEPTHS OF UTILITES.
5. AT LEAST 48 HOURS PRIOR TO CONSTRUCTION, CALL "ONE CALL" AT 1.800.424.5555
6. DO NOT BACKFILL WITH NATIVE MATERIAL ON PUBLIC RIGHT-OF-WAY. ALL MATERIAL MUST BE IMPORTED
7. EROSION CONTROL: ALL "LAND DISTURBING ACTIVITY" IS SUBJECT TO PROVISIONS OF MERCER ISLAND ORDINANCE 95C-118 "STORM WATER MANAGEMENT." SPECIFIC ITEMS TO BE FOLLOWED AT YOUR SITE:
8. PROTECT ADJACENT PROPERTIES FROM ANY INCREASED RUNOFF OR SEDIMENTATION DUE TO THE CONSTRUCTION PROJECT THROUGH THE USE OF APPROPRIATE "BEST MANAGEMENT PRACTICES" (BMP) EXAMPLES INCLUDE, BUT ARE NOT LIMITED TO, SEDIMENT TRAPS, SEDIMENT PONDS, FILTER FABRIC FENCES, VEGETATIVE BUFFER STRIPS OR BIOENGINEERED SWALES.
9. CONSTRUCTION ACCESS TO THE SITE SHOULD BE LIMITED TO ONE ROUTE. STABILIZE ENTRANCE WITH QUARRY SPALLS TO PREVENT SEDIMENT FROM LEAVING THE SITE OR ENTERING THE STORM DRAINS.
10. PREVENT SEDIMENT, CONSTRUCTION DEBRIS, PAINTS, SOLVENTS, ETC., OR OTHER TYPES OF POLLUTION FROM ENTERING PUBLIC STORM DRAINS. KEEP ALL POLLUTION ON YOUR SITE.
11. ALL EXPOSED SOILS SHALL REMAIN DENUDED FOR NO LONGER THAN SEVEN (7) DAYS AND SHALL BE STABILIZED WITH MULCH, HAY, OR THE APPROPRIATE GROUND COVER. ALL EXPOSED SOILS SHALL BE COVERED IMMEDIATELY DURING ANY RAIN EVENT.
12. INSTALLATION OF CONCRETE DRIVEWAYS, TREES, SHRUBS, IRRIGATION, BOULDERS, BERMS, WALLS, GATES, AND OTHER IMPROVEMENTS ARE NOT ALLOWED IN THE PUBLIC RIGHT-OF-WAY WITHOUT PRIOR APPROVAL, AND AN ENCROACHMENT AGREEMENT AND RIGHT OF WAY PERMIT FROM THE SENIOR DEVELOPMENT ENGINEER.
13. OWNER SHALL CONTROL DISCHARGE OF SURFACE DRAINAGE RUNOFF FROM EXISTING AND NEW IMPERVIOUS AREAS IN A RESPONSIBLE MANNER. CONSTRUCTION OF NEW GUTTERS AND DOWNSPOUTS, DRY WELLS, LEVEL SPREADERS OR DOWNSTREAM CONVEYANCE PIPE MAY BE NECESSARY TO MINIMIZE DRAINAGE IMPACT TO YOUR NEIGHBORS. CONSTRUCTION OF MINIMUM DRAINAGE IMPROVEMENTS SHOWN OR CALLED OUT ON THIS PLAN DOES NOT IMPLY RELIEF FROM CIVIL LIABILITY FOR YOUR DOWNSTREAM DRAINAGE.
14. POT HOLING THE PUBLIC UTILITIES IS REQUIRED PRIOR TO ANY GRADING ACTIVITIES LESS THAN 6" OVER THE PUBLIC MAINS (WATER, SEWER AND STORM SYSTEMS). IF THERE IS A CONFLICT, THE APPLICANT IS REQUIRED TO SUBMIT A REVISION FOR APPROVAL PRIOR TO ANY GRADING ACTIVITIES OVER THE PUBLIC MAINS.
15. REMEMBER: EROSION CONTROL IS YOUR FIRST INSPECTION.
16. ROOF DRAINS MUST BE CONNECTED TO THE STORM DRAIN SYSTEM AND INSPECTED BY THE PUBLIC WORKS DEPARTMENT PRIOR TO ANY BACKFILLING OF PIPE.
17. SILT FENCE: CLEAN AND PROVIDE REGULAR MAINTENANCE OF THE SILT FENCE. THE FENCE IS TO REMAIN VERTICAL AND IS TO FUNCTION PROPERLY THROUGHOUT THE TERM OF THE PROJECT.
18. WORK IN PUBLIC RIGHT OF WAY REQUIRES A RIGHT-OF-WAY USE PERMIT.
19. REFER TO WATER SERVICE PERMIT FOR ACTUAL LOCATION OF NEW WATER METER AND SERVICE LINE DETERMINED BY MERCER ISLAND WATER DEPARTMENT.
20. THE TV INSPECTION OF THE EXISTING SIDE SEWER TO THE CITY SEWER MAIN IS REQUIRED. IF THE RESULT OF THE TV INSPECTION IS NOT IN SATISFACTORY CONDITION, AS DETERMINED BY THE CITY OF MERCER ISLAND INSPECTOR, THE REPLACEMENT OF THE EXISTING SIDE SEWER IS REQUIRED.
21. NEWLY INSTALLED SIDE SEWER REQUIRES A 4 P.S.I. AIR TEST OR PROVIDE 10' OF HYDROSTATIC HEAD TEST.
22. POT HOLING THE PUBLIC UTILITIES IS REQUIRED PRIOR TO ANY GRADING ACTIVITIES LESS THAN 6" OVER THE PUBLIC MAINS (WATER, SEWER AND STORM SYSTEMS). IF THERE IS A CONFLICT, THE APPLICANT IS REQUIRED TO SUBMIT A REVISION FOR APPROVAL PRIOR TO ANY GRADING ACTIVITIES OVER THE PUBLIC MAINS.
23. THE LIMITS AND EXTENDS OF THE PAVEMENT IN THE PUBLIC RIGHT OF WAY SHALL BE DETERMINED BY THE CITY ENGINEER PRIOR TO FINALIZE THE PROJECT.

ADDITIONAL CONSTRUCTION STORMWATER NOTES

1. APPROVAL OF THIS EROSION/SEDIMENTATION CONTROL (ESC) PLAN DOES NOT CONSTITUTE AN APPROVAL OF PERMANENT ROAD OR DRAINAGE DESIGN (E.G. SIZE AND LOCATION OF ROADS, PIPES, RESTRICTORS, CHANNELS, RETENTION FACILITIES, UTILITIES).
2. THE IMPLEMENTATION OF THESE ESC PLANS AND THE CONSTRUCTION, MAINTENANCE, REPLACEMENT, AND UPGRADING OF THESE ESC FACILITIES IS THE RESPONSIBILITY OF THE APPLICANT/CONTRACTOR UNTIL ALL CONSTRUCTION IS COMPLETED AND APPROVED AND VEGETATION/LANDSCAPING IS ESTABLISHED.
3. THE BOUNDARIES OF THE CLEARING LIMITS SHOWN ON THIS PLAN SHALL BE CLEARLY FLAGGED IN THE FIELD PRIOR TO CONSTRUCTION. DURING THE CONSTRUCTION PERIOD, NO DISTURBANCE BEYOND THE FLAGGED CLEARING LIMITS SHALL BE PERMITTED. THE FLAGGING SHALL BE MAINTAINED BY THE APPLICANT/CONTRACTOR FOR THE DURATION OF CONSTRUCTION.
4. THE ESC FACILITIES SHOWN ON THIS PLAN MUST BE CONSTRUCTED IN CONJUNCTION WITH ALL CLEARING AND GRADING ACTIVITIES, AND IN SUCH A MANNER AS TO INSURE THAT SEDIMENT AND SEDIMENT LADEN WATER DO NOT ENTER THE DRAINAGE SYSTEM, ROADWAYS, OR VIOLATE APPLICABLE WATER STANDARDS.
5. THE ESC FACILITIES SHOWN ON THIS PLAN ARE THE MINIMUM REQUIREMENTS FOR ANTICIPATED SITE CONDITIONS. DURING THE CONSTRUCTION PERIOD, THESE ESC FACILITIES SHALL BE UPGRADED AS NEEDED FOR UNEXPECTED STORM EVENTS AND TO ENSURE THAT SEDIMENT AND SEDIMENT-LADEN WATER DO NOT LEAVE THE SITE.
6. THE ESC FACILITIES SHALL BE INSPECTED DAILY BY THE APPLICANT/CONTRACTOR AND MAINTAINED AS NECESSARY TO ENSURE THEIR CONTINUED FUNCTIONING.
7. THE ESC FACILITIES ON INACTIVE SITES SHALL BE INSPECTED AND MAINTAINED A MINIMUM OF ONCE A MONTH OR WITHIN THE 48 HOURS FOLLOWING A MAJOR STORM EVENT.
8. AT NO TIME SHALL MORE THAN ONE FOOT OF SEDIMENT BE ALLOWED TO ACCUMULATE WITHIN A TRAPPED CATCH BASIN. ALL CATCH BASINS AND CONVEYANCE LINES SHALL BE CLEANED PRIOR TO PAVING. THE CLEANING OPERATION SHALL NOT FLUSH SEDIMENT LADEN WATER INTO THE DOWNSTREAM SYSTEM.
9. STABILIZED CONSTRUCTION ENTRANCES SHALL BE INSTALLED AT THE BEGINNING OF CONSTRUCTION AND MAINTAINED FOR THE DURATION OF THE PROJECT. ADDITIONAL MEASURES MAY BE REQUIRED TO INSURE THAT ALL PAVED AREAS ARE KEPT CLEAN FOR THE DURATION OF THE PROJECT.
10. TREE PROTECTION FENCING SHALL BE PLACED UNDER THE SUPERVISION OF THE PROJECT ARBORIST (SUPERIOR NW ENTERPRISES) AND AS SHOWN ON PLAN. DEPICTED LAYOUTS FOR FENCING ARE BASED ON SUPERIOR NW ENTERPRISES' REPORT TITLED "PRE-CONSTRUCTION ASSESSMENT FOR LOT DEVELOPMENT AT XXXX 79th AVENUE SE, MERCER ISLAND, WA, PARCEL No. 3206000050" DATED JULY 7, 2022.

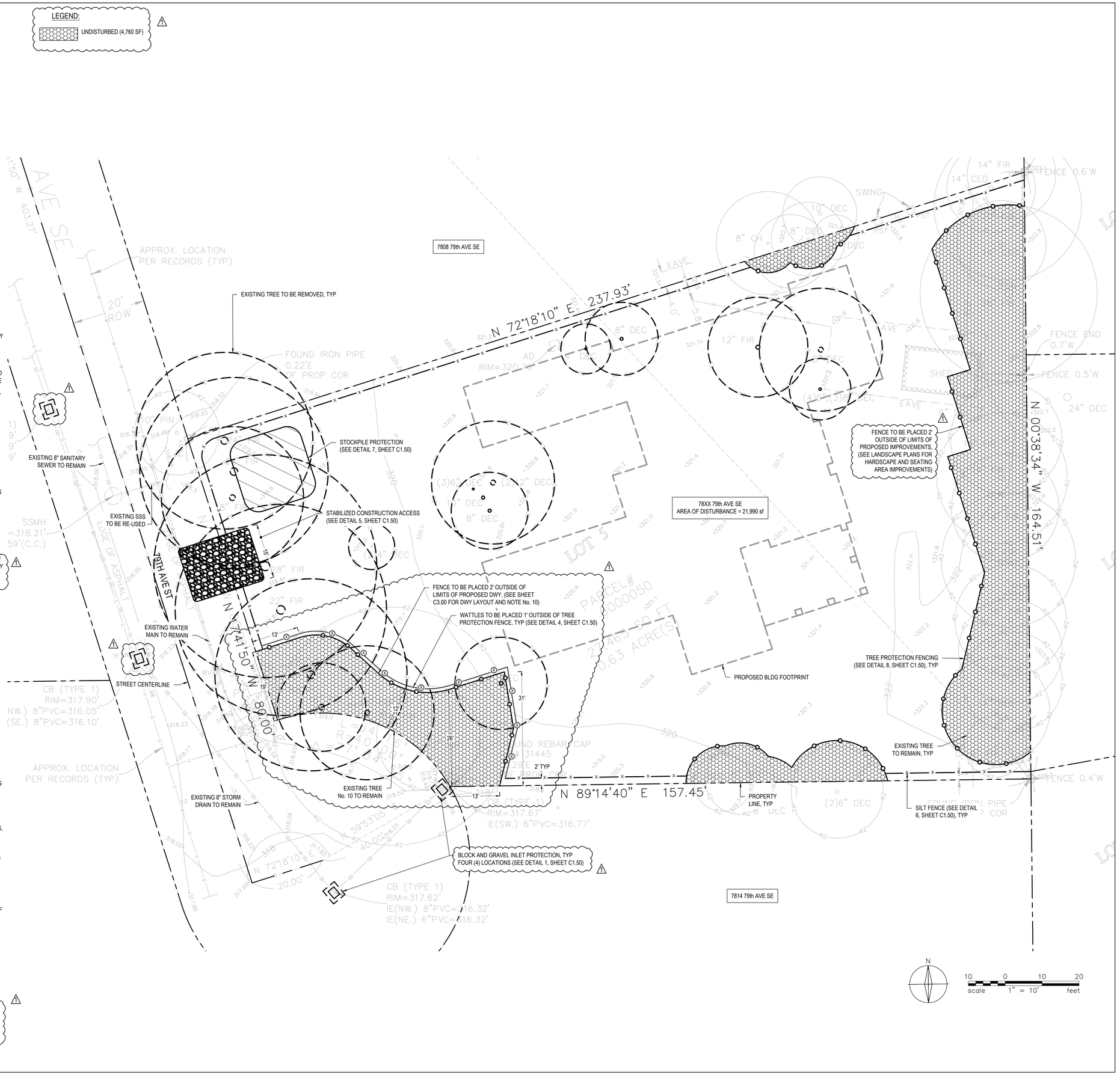

7-26-2022

DESIGN HL
DRAWN HL
CHECKED HL
SHEET ISSUE DATE 03.07.2022
DRAWING SETS
PRE-APPLICATION 09/23/21
PERMIT 03/07/22
SET TITLE DATE
SET TITLE DATE

REVISIONS

#	DATE	DESCRIPTION
1	07.29.22	BLDG PERMIT REV 01

HLENGINEERING
6040 California Ave SW
Suite C
Seattle, WA 98136

BRINDLEY RESIDENCE

ADDRESS T.B.D.
78xx - 79th AVE SE
MERCER ISLAND,
WA 98040

PERMIT DRAWINGS

Temporary Erosion and Sedimentation Control Plan

C1.00

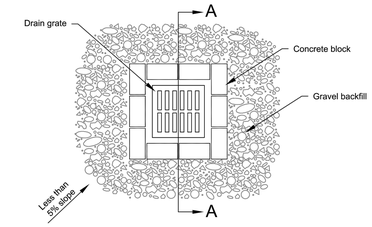

Plan View

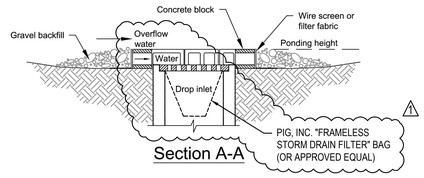

Section A-A

Notes:
1. Drop inlet sediment barriers are to be used for small, nearly level drainage areas. (less than 5%)
2. Excavate a basin of sufficient size adjacent to the drop inlet.
3. The top of the structure (ponding height) must be well below the ground elevation downslope to prevent runoff from bypassing the inlet. A temporary dike may be necessary on the downslope side of the structure.

NOT TO SCALE

DEPARTMENT OF ECOLOGY State of Washington

Block and Gravel Filter

Revised June 2016

Please see *http://www.ecy.wa.gov/copyright.html* for copyright notice including permissions, limitation of liability, and disclaimer.

DETAIL: BLOCK AND GRAVEL FILTER
NTS

DETAIL NO.: 1
REF SHEET: C1.00

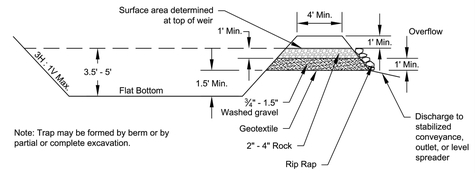

Note: Trap may be formed by berm or by partial or complete excavation.

NOT TO SCALE

DEPARTMENT OF ECOLOGY State of Washington

Cross Section of Sediment Trap

Revised June 2016

Please see *http://www.ecy.wa.gov/copyright.html* for copyright notice including permissions, limitation of liability, and disclaimer.

DETAIL: CROSS SECTION OF SEDIMENT TRAP
NTS

DETAIL NO.: 2
REF SHEET: C1.00

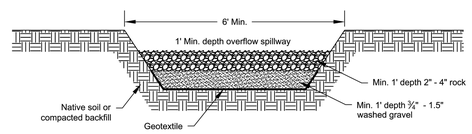

NOT TO SCALE

DEPARTMENT OF ECOLOGY State of Washington

Sediment Trap Outlet

Revised June 2016

Please see *http://www.ecy.wa.gov/copyright.html* for copyright notice including permissions, limitation of liability, and disclaimer.

DETAIL: SEDIMENT TRAP OUTLET
NTS

DETAIL NO.: 3
REF SHEET: C1.00

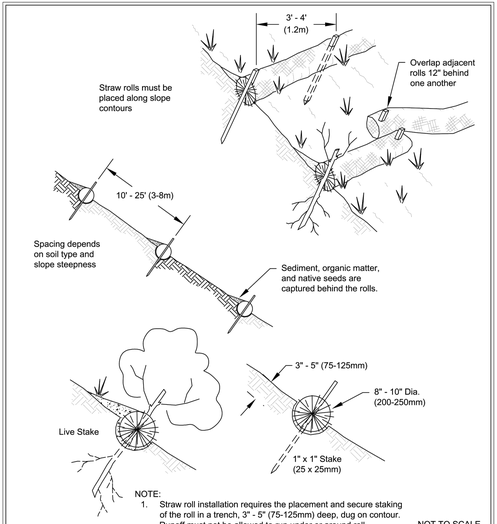

NOTE:
1. Straw roll installation requires the placement and secure staking of the roll in a trench, 3" - 5" (75-125mm) deep, dug on contour. Runoff must not be allowed to run under or around roll.

NOT TO SCALE

DEPARTMENT OF ECOLOGY State of Washington

Wattles

Revised December 2016

Please see *http://www.ecy.wa.gov/copyright.html* for copyright notice including permissions, limitation of liability, and disclaimer.

DETAIL: WATTLES
NTS

DETAIL NO.: 4
REF SHEET: C1.00

NOT TO SCALE

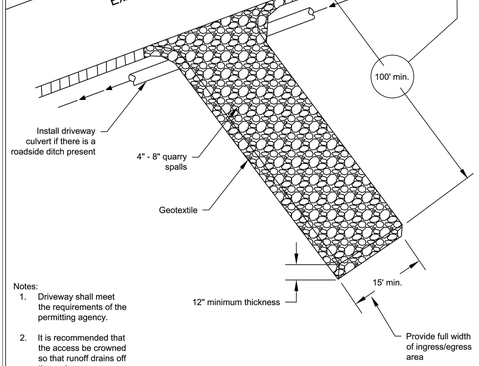

Notes:
1. Driveway shall meet the requirements of the permitting agency.
2. It is recommended that the access be crowned so that runoff drains off the pad.

DEPARTMENT OF ECOLOGY State of Washington

Stabilized Construction Access

Revised June 2018

Please see *http://www.ecy.wa.gov/copyright.html* for copyright notice including permissions, limitation of liability, and disclaimer.

DETAIL: STABILIZED CONSTRUCTION ENTRANCE
NTS

DETAIL NO.: 5
REF SHEET: C1.00

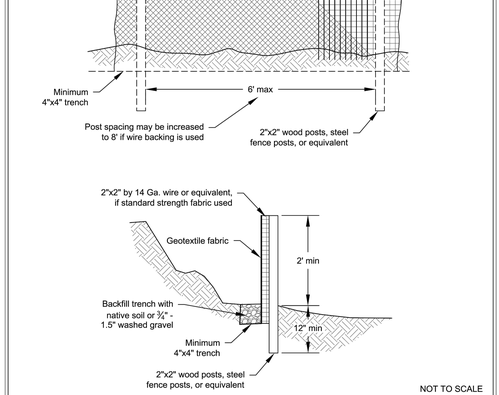

NOT TO SCALE

DEPARTMENT OF ECOLOGY State of Washington

Silt Fence

Revised July 2017

Please see *http://www.ecy.wa.gov/copyright.html* for copyright notice including permissions, limitation of liability, and disclaimer.

DETAIL: SILT FENCE
NTS

DETAIL NO.: 6
REF SHEET: C1.00

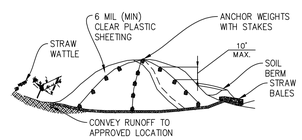

STOCKPILES

DETAIL: STOCKPILE COVERING
NTS

DETAIL NO.: 7
REF SHEET: C1.00

TREE PROTECTION FENCING AND SIGN

1. CHAIN LINK FENCE REQUIRED (NO ORANGE CONSTRUCTION FENCE OR PLYWOOD)
2. MINIMUM 6' HIGH
3. FENCE SHALL BE SUPPORTED BY RIGID POSTS DRIVEN INTO THE GROUND AT 8' MAXIMUM INTERVALS
4. MUST BE INSTALLED PRIOR TO DEMOLITION OR GROUND DISTURBANCE
5. KEPT IN PLACE FOR THE DURATION OF CONSTRUCTION
6. NO DUMPING OF ANY MATERIALS IN THE PROTECTION AREA
7. NO SOIL DISTURBANCE OR ACTIVITY ALLOWED WITHIN FENCED AREA: MATERIAL STORAGE/STOCKPILING, PARKING, EXCAVATION, DUMPING, OR WASHING
8. MODIFICATIONS OF THESE REQUIREMENTS BY APPROVAL OF SDCI PLANNER ONLY
9. IF ROOTS GREATER THAN 2 INCH FOUND OUTSIDE OF FENCING, PROTECT BY HAND EXCAVATION AND, IF NECESSARY, CUT CLEANLY AND KEEP MOIST
10. USE 3 INCHES OR DEEPER WOOD CHIP MULCH OUTSIDE FENCED AREAS TO PROTECT FEEDER ROOTS

VEGETATION PROTECTION (DOES NOT APPLY TO TREES)

1. ORANGE MESH OR SIMILAR OPEN MATERIAL
2. PROTECT VEGETATION OUTSIDE CONSTRUCTION ZONE WITH FENCING AS SHOWN

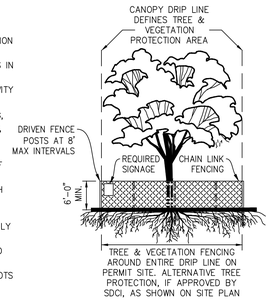

DETAIL: TREE PROTECTION
NTS

DETAIL NO.: 8
REF SHEET: C1.00

7-26-2022

DESIGN	HL
DRAWN	HL
CHECKED	HL
SHEET ISSUE DATE	03.07.2022
DRAWING SETS	
PRE-APPLICATION	09/23/21
PERMIT	03/07/22
SET TITLE	DATE
SET TITLE	DATE

REVISIONS

#	DATE	DESCRIPTION
1	07.29.22	BLDG PERMIT REV 01

HL ENGINEERING

6040 California Ave SW
Suite C
Seattle, WA 98136

BRINDLEY RESIDENCE

ADDRESS T.B.D.
78xx - 79th AVE SE
MERCER ISLAND,
WA 98040

PERMIT DRAWINGS

Temporary Erosion and Sedimentation Control Details

C1.50

CITY OF MERCER ISLAND

COMMUNITY PLANNING & DEVELOPMENT
9611 SE 36TH STREET | MERCER ISLAND, WA 98040
PHONE: 206.275.7605 | www.mercergov.org

TREE INVENTORY & REPLACEMENT SUBMITTAL INFORMATION

EXCEPTIONAL TREES

Exceptional Trees- means a tree or group of trees that because of its unique historical, ecological or aesthetic value constitutes an important community resource. A tree that is rare or exceptional by virtue of its size, species, condition, cultural/historical importance, age, and/or contribution as part of a tree grove. Trees with a diameter of more than 36 inches, or with a diameter that is equal to or greater than the diameter listed in the Exceptional Tree Table shown in MICC 19.16 under Tree, Exceptional.

List the total number of trees for each category and the tree identification numbers from the arborist report.

Number of trees 36" or greater: 0
List tree numbers:

Number of trees 24" or greater (including 36" or greater): 7
List tree numbers: 3,5-7,10,16* [*multi form stump sprouts, refer to report] 37,
3 and 5-7 do not fully count as large trees due to their compromised state
Number of trees from Exceptional Tree Table (MICC 19.16): 0
List tree numbers:

LARGE REGULATED TREES

Large Regulated Trees- means any tree with a diameter of 10 inches or more, and any tree that meets the definition of an Exceptional Tree.

Number of Large Regulated Trees on site: 30 (A)
List tree numbers: 2-11,15,16,19-26,28-31,34, 38-41&43** [** not in original report, see addendum]

Number of Large Regulated Trees on site proposed for removal: 13 (B)
List tree numbers: 2-9(see note below), 15, 16, 19- 21,

Percentage of trees to be retained ((A-B)/Ax100) note: must be at least 30%: 57 %

RIGHT OF WAY TREES

Right of Way Trees- means a tree that is located in the street right of way adjacent to the project property.

Number of Large Regulated Trees in right of way: 0
List tree numbers:

Number of Large Regulated Trees in right of way proposed for removal: 0

\\chfs1\share\CPD\FORMS\1Current Forms\Engineering Forms\TreeInventoryReplacementSubmittalInformation.docx 1/2019

Trees #2-9 are compromised in structure and will never achieve full biological stature. They should only count as 1:1 replacement trees and will be shown in the first row in the table below.

List tree numbers:
Reason for removal:

TREE REPLACEMENT

Tree replacement- removed trees must be replaced based on the ratio in the table below. Replacement trees shall be conifers at least six feet tall and or deciduous at least one and one-half inches in diameter at base.

Diameter of Removed Tree (measured 4.5' above ground)	Tree replacement Ratio	Number of Trees Proposed for Removal	Number of Tree Required for Replacement Based on Size/Type
Less than 10" 2-9,13,14,17,18	1	12	12
10" up to 24" 15,16,19-21	2	5	10
Greater than 24" up to 36"	3	0	
Greater than 36" and any Exceptional Tree	6	0	
	TOTAL TREE REPLACEMENTS		(22) see note below

Arborist note - 22 trees will not fit on this site with any hope of long term proper growth structure and health. There is space for 8 trees at most based on the placement of the ones to be retained. Trying to cram more than this on the site will result in premature failures.

TREE RETENTION TABLE

NO.	SPECIES	COMMENTS
1	SCOTS PINE	NOT ON SUBJECT PROPERTY
2	DOUGLAS FIR	TO BE REMOVED
3	DOUGLAS FIR	TO BE REMOVED
4	DOUGLAS FIR	TO BE REMOVED
5	DOUGLAS FIR	TO BE REMOVED
6	DOUGLAS FIR	TO BE REMOVED
7	DOUGLAS FIR	TO BE REMOVED
8	DOUGLAS FIR	TO BE REMOVED
9	DOUGLAS FIR	TO BE REMOVED
10	DOUGLAS FIR	
11	DOUGLAS FIR	
12	PORTUGUESE LAUREL	APPROX. LOCATION
13	FRUITING PLUM	TO BE REMOVED
14	FRUITING PLUM	TO BE REMOVED
15	BLACK WALNUT	TO BE REMOVED
16	BIG LEAF MAPLE	TO BE REMOVED
17	APPLE	TO BE REMOVED
18	APPLE	TO BE REMOVED
19	DOUGLAS FIR	TO BE REMOVED
20	FIG	TO BE REMOVED
21	SITKA WILLOW	TO BE REMOVED
22	DOUGLAS FIR	
23	INCENSE CEDAR	
24	DOUGLAS FIR	
25	DOUGLAS FIR	APPROX. LOCATION
26	DOUGLAS FIR	APPROX. LOCATION
27	ENGLEMANN SPRUCE	APPROX. LOCATION
28	DOUGLAS FIR	
29	DOUGLAS FIR	
30	DOUGLAS FIR	
31	PIN OAK	
32	DOUGLAS FIR	
33	RHODODENDRON	APPROX. LOCATION
34	CHERRY	NOT ON SUBJECT PROPERTY
35	CHERRY	
36	CHERRY	ON PROPERTY LINE
37	DOUGLAS FIR	
38	LEYLAND CYPRESS	
39	LEYLAND CYPRESS	APPROX. LOCATION
40	DOUGLAS FIR	
41	DOUGLAS FIR	
42	HINOKI CYPRESS	ON PROPERTY LINE
43	DOUGLAS FIR	APPROX. LOCATION; NOT ON SUBJECT PROPERTY
44	PHOTINIA	MIDDLE TREE NOT ON SUBJECT PROPERTY
45	CHERRY	NOT ON SUBJECT PROPERTY
46	JAPANESE MAPLE	APPROX. LOCATION; NOT ON SUBJECT PROPERTY

LEGEND:

UNDISTURBED (4,760 SF)

TREE RETENTION AND REMOVAL NOTES

1. SEE SHEETS C1.00 AND C1.50 FOR ADDITIONAL TREE PROTECTION LAYOUTS AND DETAILS.
2. REFER TO ARBORIST REPORT TITLED "PRECONSTRUCTION ASSESSMENT FOR LOT DEVELOPMENT AT XXXX 79TH AVENUE SE, MERCER ISLAND, WA. PARCEL NUMBER 3206000050" PREPARED BY SUPERIOR NW ENTERPRISES, DATED MAY 26, 2021 FOR ADDITIONAL TREE ASSESSMENTS AND RECOMMENDATIONS RELATED TO RETENTION AND REMOVAL OF EXISTING TREES.
   - 2.1. REFER TO JULY 7, 2022 ADDENDUM TO ARBORIST REPORT FOR SPECIFIC ASSESSMENT OF IMPACTS AND PROTECTION MEASURES FOR TREE No. 10.

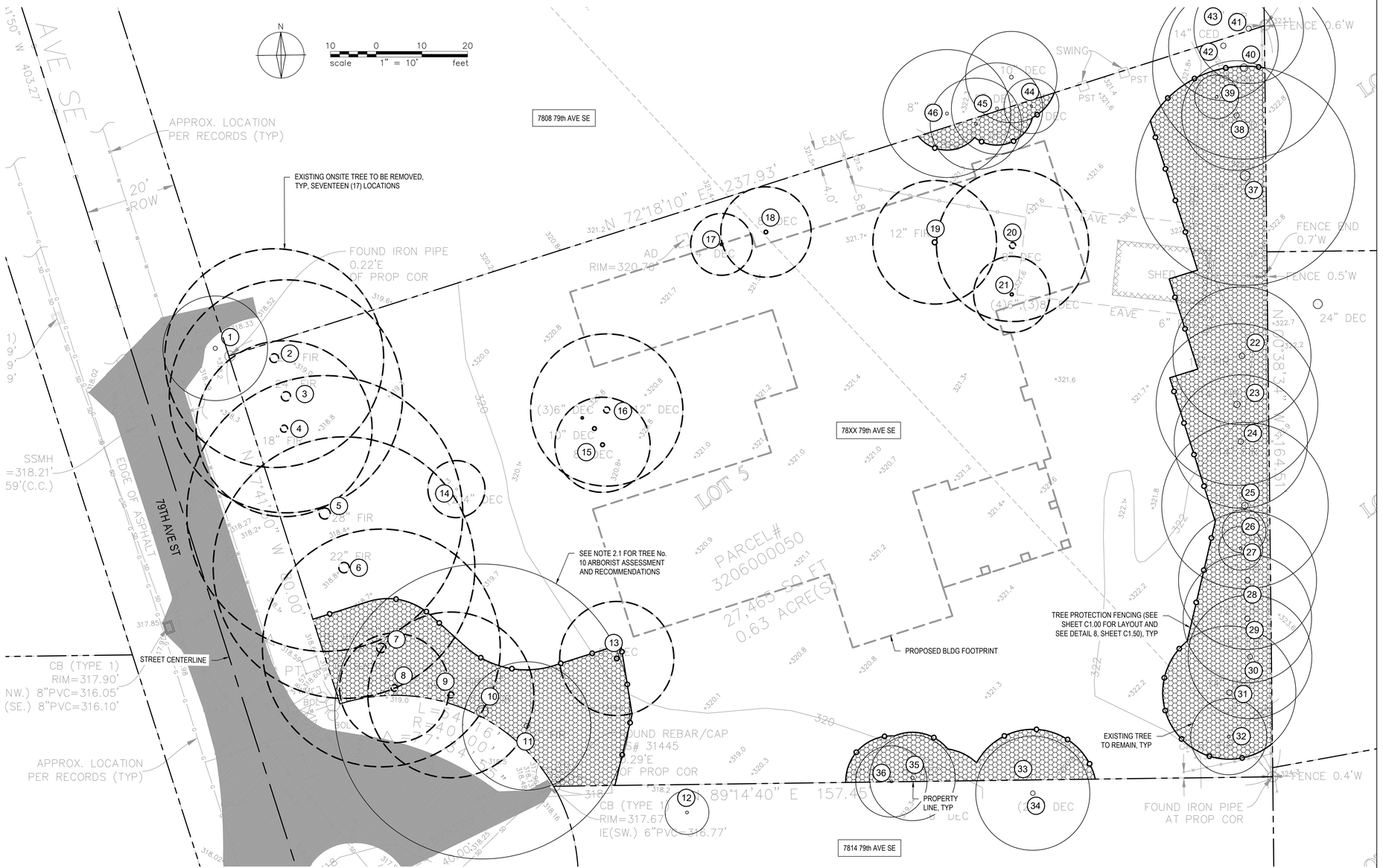

PATRICK A. HANSEN
STATE OF WASHINGTON
48605
REGISTERED PROFESSIONAL ENGINEER

7-26-2022

DESIGN	HL
DRAWN	HL
CHECKED	HL
SHEET ISSUE DATE	03.07.2022

DRAWING SETS

PRE-APPLICATION	09/23/21
PERMIT	03/07/22
SET TITLE	DATE
SET TITLE	DATE

REVISIONS

#	DATE	DESCRIPTION
1	07.29.22	BLDG PERMIT REV 01

HL ENGINEERING
6040 California Ave SW
Suite C
Seattle, WA 98136

BRINDLEY RESIDENCE

ADDRESS T.B.D.
78xx - 79th AVE SE
MERCER ISLAND,
WA 98040

PERMIT DRAWINGS

Tree Retention Plan

C1.60

SITE DEMOLITION NOTES

1. SITE DEMOLITION SHALL BE IN ACCORDANCE WITH THE APPLICABLE CONDITIONS OF THE CITY OF MERCER ISLAND.
2. THE CONTRACTOR SHALL COORDINATE ALL SITE DEMOLITION WITH THE PROJECT'S SHORING AND SITE EXCAVATION SEQUENCE OF WORK.
3. ONSITE DEMOLITION SHALL INCLUDE EXISTING BUILDINGS AND THEIR FOUNDATIONS (WHERE APPLICABLE), MISCELLANEOUS ASPHALT AND CONCRETE PAVEMENT AND UNDER GROUND UTILITIES, EXCEPT THOSE INDICATED TO REMAIN.
4. NO DEMOLITION WITHIN THE PUBLIC RIGHT-OF-WAY SHALL COMMENCE UNTIL A CITY OF MERCER ISLAND RIGHT OF WAY PERMIT HAS BEEN APPROVED.
5. THE CONTRACTOR SHALL PROVIDE, ERECT AND MAINTAIN ALL TEMPORARY BARRIERS AND SECURITY DEVICES AS NECESSARY FOR THE PROTECTION OF THE ADJACENT PUBLIC IMPROVEMENTS WITHIN THE STREET RIGHT-OF-WAY.
6. THE CONTRACTOR SHALL OBTAIN ALL REQUIRED CITY OF MERCER ISLAND DEMOLITION AND RIGHT OF WAY PERMITS BEFORE COMMENCING DEMOLITION.
7. DEMOLITION OUTSIDE THE LIMITS OF WORK IS ALLOWED UNLESS NOTED OTHERWISE ON THE PLAN.
8. THE CONTRACTOR SHALL COORDINATE THE REMOVAL, ABANDONMENT, AND/OR CAPPING OF THE EXISTING UTILITIES WITH THE APPLICABLE UTILITY AGENCY.
9. CONTRACTOR SHALL VERIFY THAT ALL TELEPHONE AND COMMUNICATIONS WIRES AND CONDUCTORS HAVE BEEN DECOMMISSIONED PRIOR TO REMOVAL OF COMMUNICATIONS AND TELEPHONE DUCTBANK CONDUIT AND VAULTS.
10. DEMOLITION ASSOCIATED WITH ELECTRICAL LINES AND APPURTENANCES SHALL BE COORDINATED WITH THE ELECTRICAL DRAWINGS. DEMOLITION FOR SPECIFIC ELECTRICAL ITEMS INDICATED ON THE DEMOLITION PLANS SHALL NOT BE CARRIED OUT UNTIL POWER SOURCES TO THE ITEMS INDICATED FOR REMOVAL HAVE BEEN MADE SAFE.
11. CLEAR AND GRUB ALL LANDSCAPED AND NON-PAVED AREAS WITHIN THE LIMITS OF WORK UNLESS NOTED OTHERWISE.
12. EXCAVATION FOR REMOVAL OF FOUNDATIONS, SLABS ON GRADE AND UTILITIES SHALL BE IN ACCORDANCE WITH THE PROJECT'S GEOTECHNICAL ENGINEERING REPORT. THE CONTRACTOR SHALL COMPLY WITH THE REPORT RECOMMENDATIONS FOR TEMPORARY CONSTRUCTION SLOPES AND SHALL NOT EXCEED THOSE SLOPES WITHOUT PRIOR APPROVAL OF THE GEOTECHNICAL ENGINEER.
13. CAP OR PLUG UTILITY SERVICES AT THE LIMITS OF EXCAVATION OR AT THE LIMITS OF DEMOLITION, UNLESS NOTED OTHERWISE.
14. LIMITS OF TREE REMOVAL SHALL INCLUDE REMOVAL OF ALL STUMPS AND GRUBBING OF ALL ROOTS TO A MINIMUM OF 3 FEET BELOW FINISH GRADE.
15. SEE LANDSCAPE PLANS FOR REQUIREMENTS AND RESTRICTIONS AT TREE PROTECTION AREAS.
16. EXISTING UNDERGROUND HEATING OIL TANKS SHALL BE DECOMMISSIONED AND REMOVED FROM THE SITE IN ACCORDANCE WITH THE CITY OF MERCER ISLAND FIRE DEPARTMENT. SUCH WORK SHALL ONLY BE CONDUCTED BY A CERTIFIED UNDERGROUND STORAGE TANK DECOMMISSIONER, AND SUCH WORK REQUIRES A FIRE DEPARTMENT PERMIT.

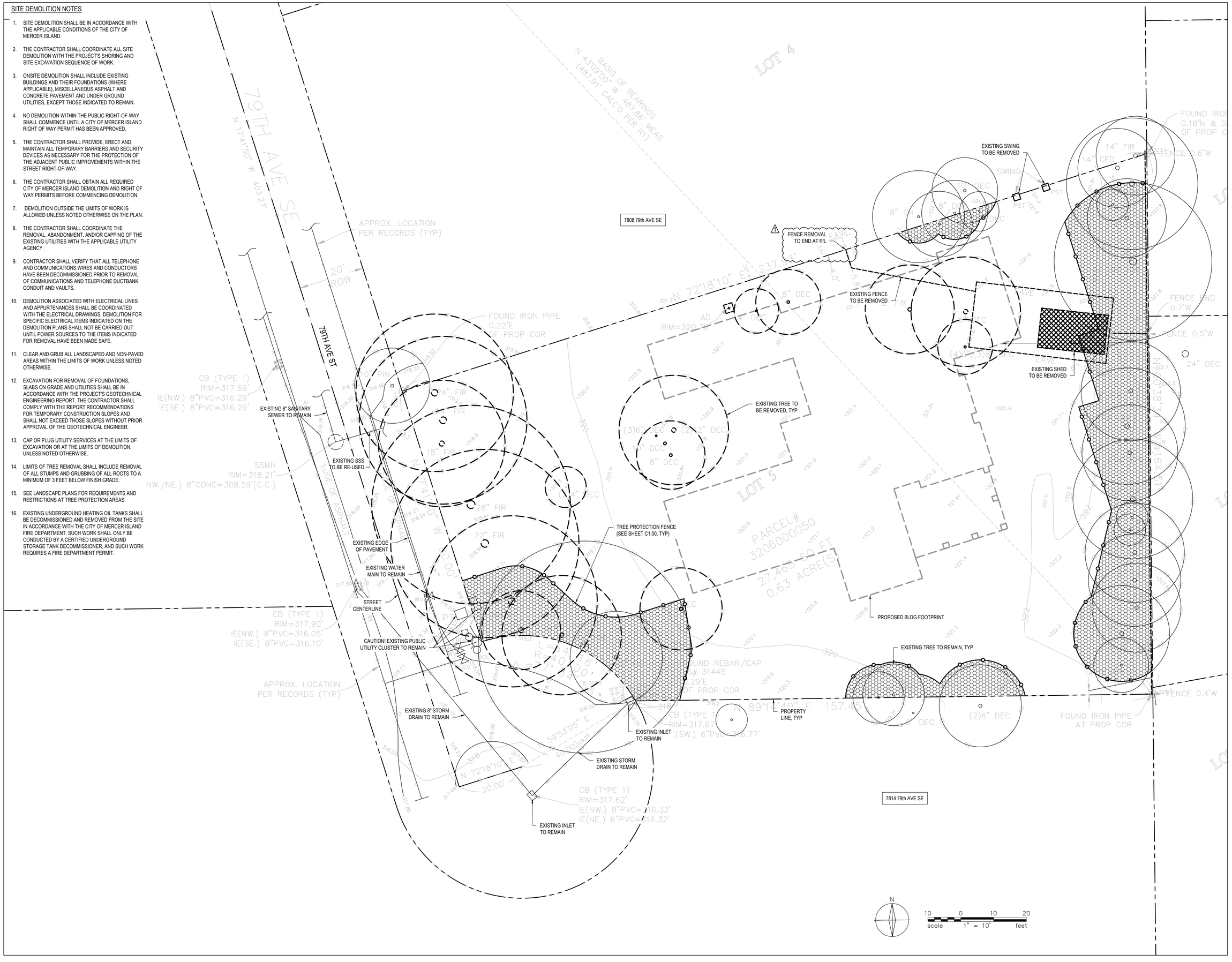

7-26-2022

DESIGN	HL
DRAWN	HL
CHECKED	HL
SHEET ISSUE DATE	03.07.2022

DRAWING SETS

PRE-APPLICATION	09/23/21
PERMIT	03/07/22
SET TITLE	DATE
SET TITLE	DATE

REVISIONS

#	DATE	DESCRIPTION
1	07.29.22	BLDG PERMIT REV 01

HL ENGINEERING

6040 California Ave SW
Suite C
Seattle, WA 98136

BRINDLEY RESIDENCE

ADDRESS T.B.D.
78xx - 79th AVE SE
MERCER ISLAND,
WA 98040

PERMIT DRAWINGS

Site Demolition Plan

C2.00

SITE PAVING NOTES

1. ALL DIMENSIONS ARE TO FACE OF CURB OR FACE OF BUILDING UNLESS NOTED OTHERWISE.
2. ALL EXTERIOR CONCRETE PAVEMENT JOINTS SHALL BE CONTROL JOINTS WITH A MAXIMUM SPACING OF 12 FEET ON CENTER. PAVEMENT PANEL LENGTH TO WIDTH RATIO SHALL NOT EXCEED 1.25. AT THE CONTRACTOR'S OPTION, THE CONTRACTOR MAY SUBSTITUTE CONSTRUCTION JOINTS FOR CONTROL JOINTS. ALL JOINTS SHALL BE COORDINATED WITH THE LANDSCAPE PLANS.
3. CONCRETE FOR EXTERIOR SITE FACILITIES, INCLUDING BUT NOT LIMITED TO CURBS, SIDEWALKS, PADS, THRUST BLOCKING, FENCE POST AND BOLLARD FOUNDATIONS, RAMPS, AND UTILITY STRUCTURES SHALL HAVE A MINIMUM COMPRESSIVE STRENGTH OF 3000 PSI AT 28 DAYS. MAXIMUM WATER/CEMENT RATIO SHALL BE 0.45 AND CONCRETE SHALL HAVE 5 PLUS OR MINUS 1.5 PERCENT AIR ENTRAINMENT. CONCRETE FOR RETAINING WALLS SHALL HAVE A MINIMUM COMPRESSIVE STRENGTH OF 4000 PSI AT 28 DAYS. MAXIMUM WATER/CEMENT RATIO SHALL BE 0.45 AND CONCRETE SHALL HAVE 5 PLUS OR MINUS 1.5 PERCENT AIR ENTRAINMENT. CONCRETE PAVEMENT SHALL HAVE A MINIMUM COMPRESSIVE STRENGTH OF 5000 PSI AT 28 DAYS, MAXIMUM WATER/CEMENT RATIO SHALL BE 0.45 AND CONCRETE SHALL HAVE A 5 PLUS OR MINUS 1.5 PERCENT AIR ENTRAINMENT.
4. PROVIDE AN EXPANSION JOINT AT ALL LOCATIONS WHERE CONCRETE WALK AND CONCRETE PAVEMENT ABUTS STRUCTURAL FOUNDATION, COLUMN OR WALL AND FIXED OBJECTS.
5. SEE LANDSCAPE PLANS FOR ADDITIONAL PAVEMENT INFORMATION AND DETAILS.

SITE GRADING NOTES

1. ALL SPOT ELEVATIONS ARE TO TOP OF PAVEMENT, GUTTER ELEVATION OR FINISHED GRADE UNLESS NOTED OTHERWISE.
2. TOP ELEVATION FOR ALL CATCH BASINS WITH SOLID COVER SHALL MATCH FINISH GRADE.
3. TOP ELEVATION FOR ALL VAULTS SHALL MATCH FINISH GRADE. SLOPE VAULT LIDS AS REQUIRED.
4. SLOPES PROVIDED ARE FOR REFERENCE ONLY, MATCH SPOT ELEVATIONS AND CONTOURS.

LEGEND:

- PCC PAVEMENT
- CRUSHED GRANITE WALKWAYS
- MORTAR-SET STONE PAVEMENT
- LANDSCAPING (AMENDED SOILS, SEE "POST-CONSTRUCTION SOIL QUALITY AND DEPTH NOTES, THIS SHEET) ⚠1
- UNDISTURBED

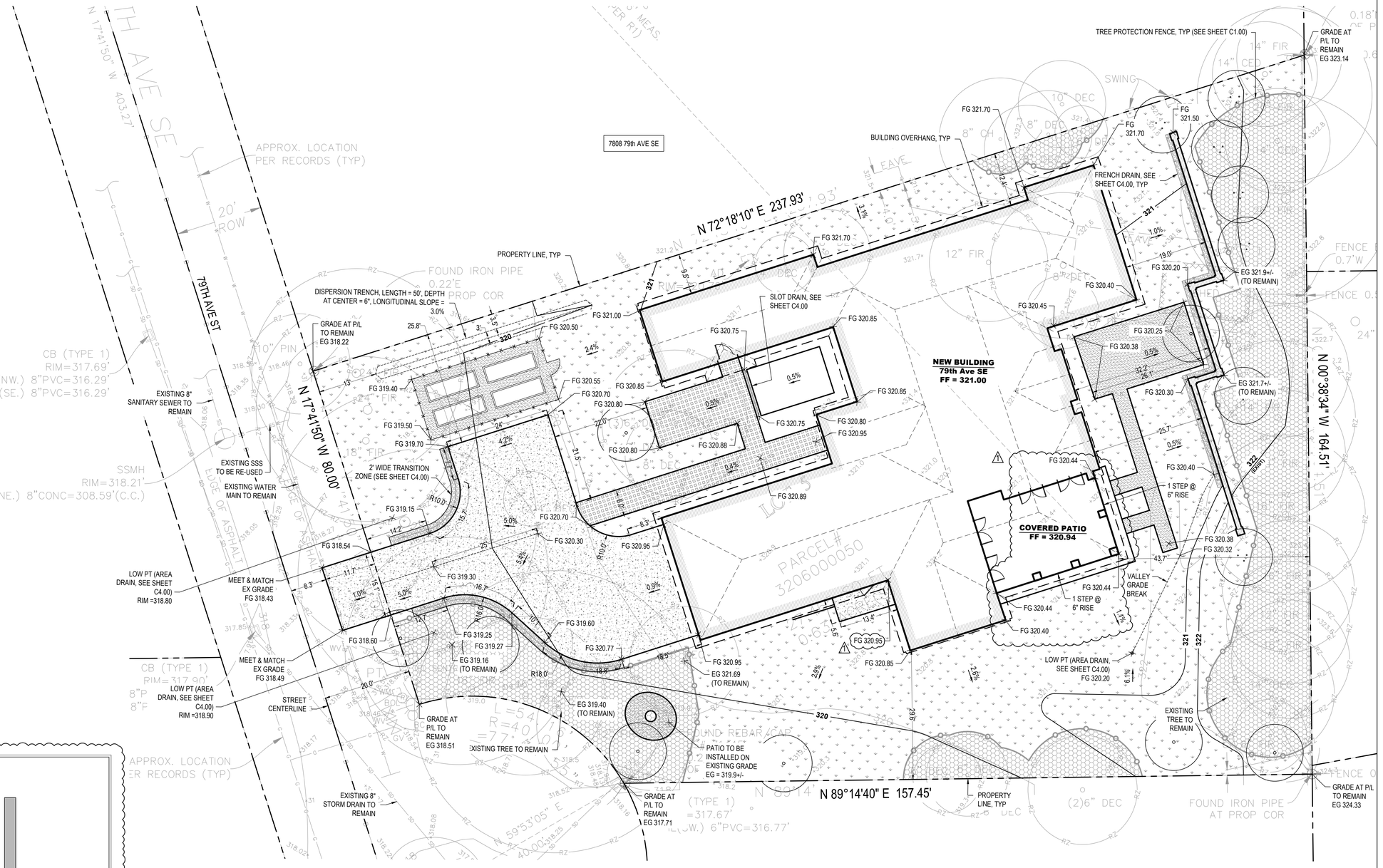

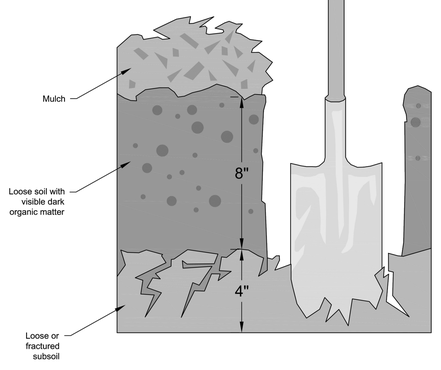

Reprinted from *Guidelines and Resources For Implementing Soil Quality and Depth BMP T5.13 in WDOE Stormwater Management Manual for Western Washington*, 2010, Washington Organic Recycling Council

NOT TO SCALE

DEPARTMENT OF ECOLOGY State of Washington

Planting Bed Cross-Section

Revised June 2016

Please see *http://www.ecy.wa.gov/copyright.html* for copyright notice including permissions, limitation of liability, and disclaimer.

POST-CONSTRUCTION SOIL QUALITY AND DEPTH NOTES (2019 SWMMWW, BMP T5.13)

1. SOIL RETENTION: RETAIN, IN AN UNDISTURBED STATE, THE DUFF LAYER AND NATIVE TOPSOIL TO THE MAXIMUM EXTENT PRACTICABLE. IN ANY AREAS REQUIRING GRADING REMOVE AND STOCKPILE THE DUFF LAYER AND TOPSOIL ON SITE IN A DESIGNATED, CONTROLLED AREA, NOT ADJACENT TO PUBLIC RESOURCES AND CRITICAL AREAS, TO BE REAPPLIED TO OTHER PORTIONS OF THE SITE WHERE FEASIBLE.
2. SOIL QUALITY: ALL AREAS SUBJECT TO CLEARING AND GRADING THAT HAVE NOT BEEN COVERED BY IMPERVIOUS SURFACE, INCORPORATED INTO A DRAINAGE FACILITY OR ENGINEERED AS STRUCTURAL FILL OR SLOPE SHALL, AT PROJECT COMPLETION, DEMONSTRATE THE FOLLOWING:
   - 2.1. A TOPSOIL LAYER WITH A MINIMUM ORGANIC MATTER CONTENT OF 10% DRY WEIGHT IN PLANTING BEDS, AND 5% ORGANIC MATTER CONTENT IN TURF AREAS, AND A PH FROM 6.0 TO 8.0 OR MATCHING THE PH OF THE UNDISTURBED SOIL. THE TOPSOIL LAYER SHALL HAVE A MINIMUM DEPTH OF EIGHT INCHES EXCEPT WHERE TREE ROOTS LIMIT THE DEPTH OF INCORPORATION OF AMENDMENTS NEEDED TO MEET THE CRITERIA. SUBSOILS BELOW THE TOPSOIL LAYER SHOULD BE SCARIFIED AT LEAST 4 INCHES WITH SOME INCORPORATION OF THE UPPER MATERIAL TO AVOID STRATIFIED LAYERS, WHERE FEASIBLE.
   - 2.2. MULCH PLANTING BEDS WITH 2 INCHES OF ORGANIC MATERIAL
   - 2.3. USE COMPOST AND OTHER MATERIALS THAT MEET THESE ORGANIC CONTENT REQUIREMENTS:
     - 2.3.1. THE ORGANIC CONTENT FOR "PRE-APPROVED" AMENDMENT RATES CAN BE MET ONLY USING COMPOST MEETING THE COMPOST SPECIFICATION FOR BIORETENTION (BMP T7.30), WITH THE EXCEPTION THAT THE COMPOST MAY HAVE UP TO 35% BIOSOLIDS OR MANURE. THE COMPOST MUST ALSO HAVE AN ORGANIC MATTER CONTENT OF 40% TO 65%, AND A CARBON TO NITROGEN RATIO BELOW 25:1. THE CARBON TO NITROGEN RATIO MAY BE AS HIGH AS 35:1 FOR PLANTINGS COMPOSED ENTIRELY OF PLANTS NATIVE TO THE PUGET SOUND LOWLANDS REGION.
     - 2.3.2. CALCULATED AMENDMENT RATES MAY BE MET THROUGH USE OF COMPOSTED MATERIAL MEETING (2.3.1.) ABOVE; OR OTHER ORGANIC MATERIALS AMENDED TO MEET THE CARBON TO NITROGEN RATIO REQUIREMENTS, AND NOT EXCEEDING THE CONTAMINANT LIMITS IDENTIFIED IN TABLE 220-B, TESTING PARAMETERS, IN WAC 173- 350-220.

SOIL AMENDED OPTIONS (2019 SWMMWW, BMP T5.13)

1. IMPLEMENTATION OPTIONS: THE SOIL QUALITY DESIGN GUIDELINES LISTED ON THIS SHEET CAN BE MET BY USING ONE OF THE METHODS LISTED BELOW:
   - 1.1. OPTION 1: LEAVE UNDISTURBED NATIVE VEGETATION AND SOIL, AND PROTECT FROM COMPACTION DURING CONSTRUCTION
   - 1.2. OPTION 2: AMEND EXISTING SITE TOPSOIL OR SUBSOIL EITHER AT DEFAULT "PRE-APPROVED" RATES, OR AT CUSTOM CALCULATED RATES BASED ON TESTS OF THE SOIL AND AMENDMENT.
   - 1.3. OPTION 3: STOCKPILE EXISTING TOPSOIL DURING GRADING, AND REPLACE IT PRIOR TO PLANTING. STOCKPILED TOPSOIL MUST ALSO BE AMENDED IF NEEDED TO MEET THE ORGANIC MATTER OR DEPTH REQUIREMENTS, EITHER AT A DEFAULT "PRE-APPROVED" RATE OR AT A CUSTOM CALCULATED RATE.
   - 1.4. OPTION 4: IMPORT TOPSOIL MIX OF SUFFICIENT ORGANIC CONTENT AND DEPTH TO MEET THE REQUIREMENTS.
2. MORE THAN ONE METHOD MAY BE USED ON DIFFERENT PORTIONS OF THE SAME SITE. SOIL THAT ALREADY MEETS THE DEPTH AND ORGANIC MATTER QUALITY STANDARDS, AND IS NOT COMPACTED, DOES NOT NEED TO BE AMENDED.

N

scale 1" = 10' (10 0 10 20 feet)

7-22-2022

DESIGN	HL
DRAWN	HL
CHECKED	HL
SHEET ISSUE DATE	03.07.2022
DRAWING SETS	
PRE-APPLICATION	09/23/21
PERMIT	03/07/22
SET TITLE	DATE
SET TITLE	DATE

REVISIONS

#	DATE	DESCRIPTION
1	07.29.22	BLDG PERMIT REV 01

HL ENGINEERING

6040 California Ave SW
Suite C
Seattle, WA 98136

BRINDLEY RESIDENCE

ADDRESS T.B.D.
78xx - 79th AVE SE
MERCER ISLAND, WA 98040

PERMIT DRAWINGS

Site Grading and Paving Plan

C3.00

STORM DRAINAGE NOTES

1. A COPY OF THE APPROVED DRAINAGE CONTROL PLANS MUST BE ON THE JOB SITE WHENEVER CONSTRUCTION IS IN PROGRESS.
2. ALL REQUIRED STORM WATER FACILITIES MUST BE CONSTRUCTED AND IN OPERATION PRIOR TO ANY PAVING UNLESS OTHERWISE APPROVED BY THE DEPARTMENT OF PLANNING AND DEVELOPMENT.
3. INSTALL CATCH BASIN INSERTS UNDER ALL CATCH BASIN AND AREA DRAIN GRATES IMMEDIATELY AFTER INSTALLATION. PROTECTION SHALL BE REMOVED AFTER FINAL PAVING AND/OR LANDSCAPING HAS BEEN ESTABLISHED.
4. TOP ELEVATION FOR ALL CATCH BASINS WITH SOLID COVER SHALL MATCH FINISH GRADE.
5. UNLESS NOTED OTHERWISE, THE CONTRACTOR MAY USE ANY COMBINATION OF PREFABRICATED FITTINGS (TEES, BENDS AND WYES) AT LOCATIONS WHERE STORM CONNECTION POINTS OF INTERSECTION (PI) ARE INDICATED. PREFABRICATED FITTINGS MAY BE ADJUSTED AS REQUIRED TO MAINTAIN POSITIVE SLOPE AND DRAINAGE. WHERE SPECIFICALLY INDICATED, THE CONTRACTOR SHALL PROVIDE THE FITTINGS AS SHOWN.
6. COORDINATE POINTS AND ELEVATIONS SHOWN FOR ALL CATCH BASINS, CLEANOUTS, AREA DRAINS AND MANHOLES ARE TO THE CENTER OF THE FRAME AND GRATE OR COVER, UNLESS NOTED OTHERWISE.
7. ALL TRENCHING FOR STORM DRAINS SHALL CONFORM TO CITY OF MERCER ISLAND STANDARD DETAILS S-3 AND S-4.
8. ALL STORM DRAIN PIPING SHALL BE INSTALLED WITH A MINIMUM SLOPE OF 1.0 PERCENT.
9. ALL STORM DRAIN MANHOLES ARE 48 INCHES IN DIAMETER, UNLESS NOTED OTHERWISE.
10. VERIFY LOCATIONS OF LATERAL BUILDING CONNECTIONS WITH THE PLUMBING DRAWINGS PRIOR TO INSTALLATION.
11. TOP ELEVATION FOR ALL VAULTS SHALL MATCH FINISH GRADE. SLOPE VAULT LIDS AS REQUIRED.
12. PIPE MATERIALS SHALL BE AS FOLLOWS:
    - 12.1. SOLID WALL STORM DRAIN PIPE SHALL BE PVC SDR 35, ASTM D3034.
    - 12.2. DUCTILE IRON STORM DRAIN PIPE SHALL BE CEMENT-MORTAR LINED (DOUBLE THICKNESS) PER CITY OF SEATTLE STANDARD SPECIFICATION SECTION 9-05.3 "DUCTILE IRON PIPE".
    - 12.3. PERFORATED SUBSURFACE DRAINAGE PIPE SHALL BE PER THE "SUBSURFACE FOUNDATION DRAINAGE" DETAIL 4, SHEET C4.60.
13. CLEANOUTS SHALL BE PER DETAIL 5, SHEET C4.60 UNLESS NOTED OTHERWISE.
14. AREA DRAINS SHALL BE PER DETAIL 3, SHEET C4.60 UNLESS NOTED OTHERWISE.
15. PRIOR TO COMMENCEMENT OF STORM DRAIN INSTALLATION, CONTRACTOR SHALL POTHOLE THE EXISTING WATER MAIN AT THE CROSSING OF THE NEW STORM DRAIN CONNECTION IN 79TH AVE SE, AND PROVIDE TOP AND BOTTOM OF WATER MAIN ELEVATIONS TO THE OWNER FOR VERIFICATION OF DESIGN.
    - 15.1. IN THE EVENT THAT THE VERTICAL CLEARANCE BETWEEN STORM DRAIN PIPE AND WATERMAIN IS LESS THAN 18", CONTROLLED DENSITY FILL SHALL BE PLACED FOR THE FULL HEIGHT OF CLEARANCE BETWEEN THE PIPES FOR A DISTANCE OF 24" IN ALL DIRECTIONS FROM THE CROSSING CENTERPOINT. ADDITIONALLY, NO PIPE JOINTS SHALL BE ALLOWED WITHIN RANGE OF THE CONTROLLED DENSITY FILL VOLUME.

⚠1

FOUNDATION DRAINAGE NOTES

1. ALL FOUNDATION DRAINAGE CLEANOUTS SHALL BE AS INDICATED WITH LIDS MARKED "FD".
2. PROVIDE DUCTILE IRON SLEEVES WHERE FOUNDATION AND UNDERSLAB DRAINS PASS BELOW FOOTINGS. SEE STRUCTURAL DRAWINGS FOR ADDITIONAL REQUIREMENTS FOR PIPES PASSING BELOW FOOTINGS.
3. SEE THE STRUCTURAL DRAWINGS FOR BUILDING FOUNDATION AND FOOTING SIZES, SLAB ON GRADE DEPTH AND FOUNDATION AND SLAB ON GRADE ELEVATIONS.
4. FOUNDATION DRAINS SHALL BE SLOPED IN THE DIRECTION INDICATED WITH A MINIMUM SLOPE OF 0.50 PERCENT UNLESS NOTED OTHERWISE.
5. UNLESS NOTED OTHERWISE, THE CONTRACTOR MAY USE ANY COMBINATION OF PREFABRICATED FITTINGS (TEES, BENDS AND WYES) FOR INSTALLATION OF THE FOUNDATION AND UNDERSLAB DRAINS. PREFABRICATED FITTINGS MAY BE ADJUSTED AS REQUIRED TO MAINTAIN POSITIVE SLOPE AND DRAINAGE. WHERE SPECIFICALLY INDICATED THE CONTRACTOR SHALL PROVIDE THE FITTINGS AS SHOWN.
6. NO FOUNDATION DRAINAGE SHALL PASS THROUGH A BUILDING FOUNDATION WALL OR FOOTING WITHOUT PRIOR APPROVAL OF THE STRUCTURAL ENGINEER.
7. CLEANOUTS SHALL BE SPACED NO GREATER THAN 100 FEET ON CENTER.

LEGEND:

- NEW OR REPLACED HARD SURFACE AREA: ROOF (7,896 SF)
- NEW OR REPLACED HARD SURFACE AREA: IMPERVIOUS DRIVEWAY (2,120 SF)
- NEW OR REPLACED HARD SURFACE AREA: IMPERVIOUS WALKWAYS (630 SF)
- NEW OR REPLACED HARD SURFACE AREA: CRUSHED GRANITE WALKWAYS (1,010 SF)
- NEW OR REPLACED PERVIOUS AREA: LANDSCAPING (10,184 SF)
- UNDISTURBED (4,760 SF)
- FRENCH DRAIN (SEE DETAIL 2, SHEET C4.60)

⚠1

- SS — 6" PVC SANITARY SIDE SEWER
- SD — 4" OR 6" STORM DRAIN (SOLID WALL PVC)
- DI — 4" OR 6" STORM DRAIN (SOLID WALL DUCTILE IRON)
- 4" STORM DRAIN (PEFORATED WALL PVC)
- DRAINAGE STRUCTURE (NOT USED)
- CLEANOUT OR AREA DRAIN AS NOTED (SEE DETAILS 3 AND 5, SHEET C4.60)
- (DS) ROOF DOWNSPOUT CONNECTION
- FLOW DIRECTION ARROW

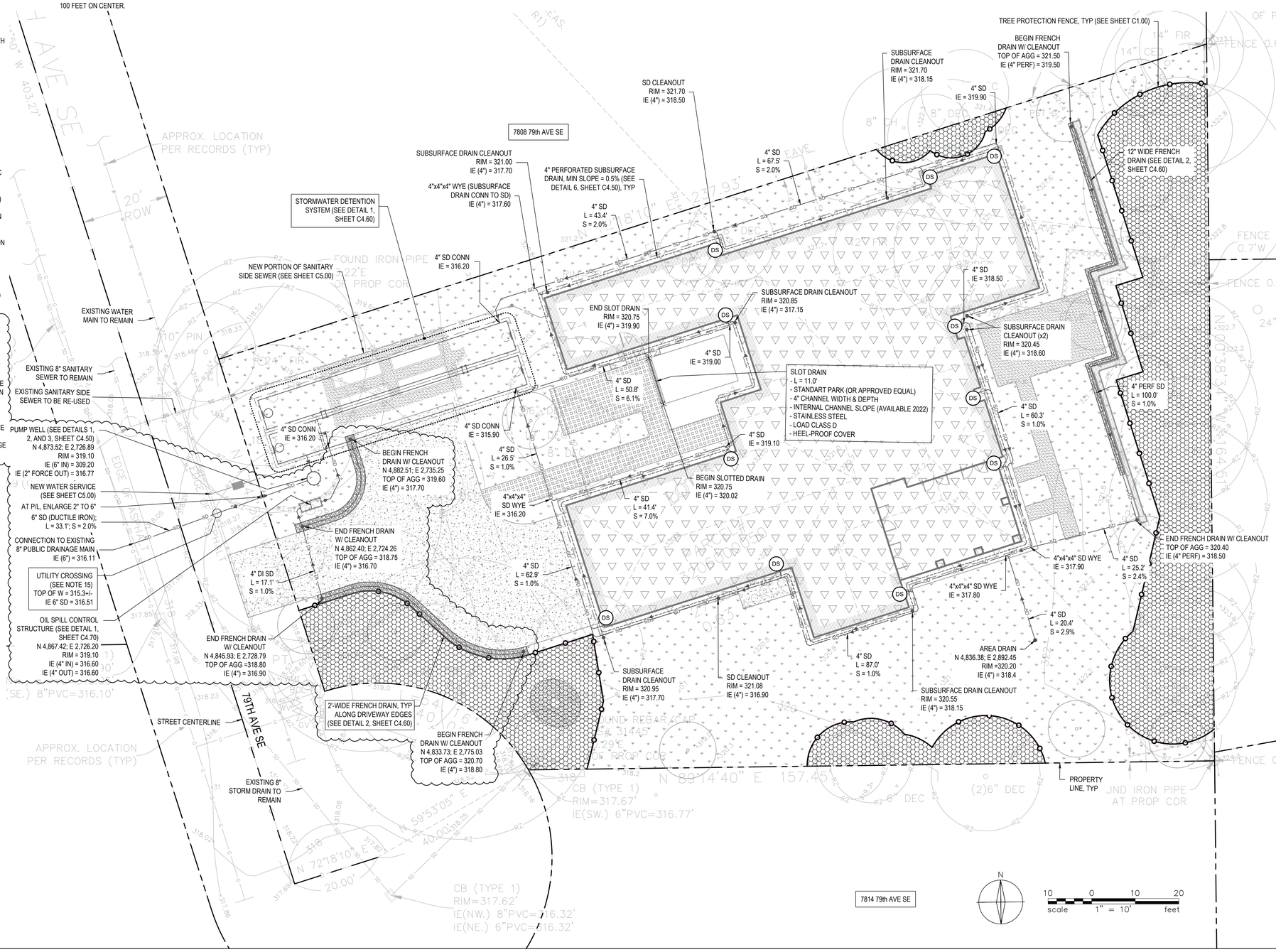

7-27-2022

DESIGN	HL
DRAWN	HL
CHECKED	HL
SHEET ISSUE DATE	03.07.2022
DRAWING SETS	
PRE-APPLICATION	09/23/21
PERMIT	03/07/22
SET TITLE	DATE
SET TITLE	DATE

REVISIONS

#	DATE	DESCRIPTION
1	07.29.22	BLDG PERMIT REV 01

HL ENGINEERING
6040 California Ave SW
Suite C
Seattle, WA 98136

BRINDLEY RESIDENCE

ADDRESS T.B.D.
78xx - 79th AVE SE
MERCER ISLAND, WA 98040

PERMIT DRAWINGS

Stormwater Site Plan

C4.00

ITEM NO.	PART NUMBER	DESCRIPTION	QTY.
1	4936000	COVER, 36IN GALV STEEL BLANK, H20 TRAFFIC RATED	1
2	4967000	36" TRAFFIC RATED FIBERGLASS FLANGE	1
3	7078000	LABEL BARCODE 4x 2-2-1/2	1

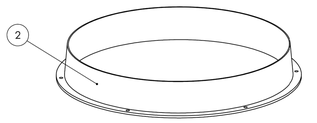

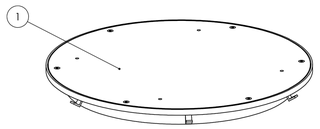

NOTES:
SHIP COVER OUT ON PALLET THAT COVER ARRIVED ON SHIP FLANGE LOOSE ON TOP OF COVER
PLACE HARDWARE KIT FOR FLANGE (PRE-PACKAGED FROM TOPP) INSIDE FLANGE PRIOR TO WRAPPING.

NEW PART	A	NA	02/10/21	JRB	
description of change	rev	project	date	initials	

Liberty Pumps®
7000 APPLE TREE AVENUE
BERGEN, N.Y. 14416
(585) 494-1817

drn by J.BURNS	tol: xx+/- .02"
	xxx+/- .005"
date 02/10/21	angles +/- 2°
scale	unless otherwise noted
title COVER 36 IN H20 TRAFFIC RATED BLANK WITH FIBERGLASS FLANGE	
part no. K001928	
drawing no. K001928	sheet number 1 of 1 / sheet size B

DETAIL: STORMWATER PUMP WELL COVER
NTS

DETAIL NO.: 1
REF SHEET: C4.00

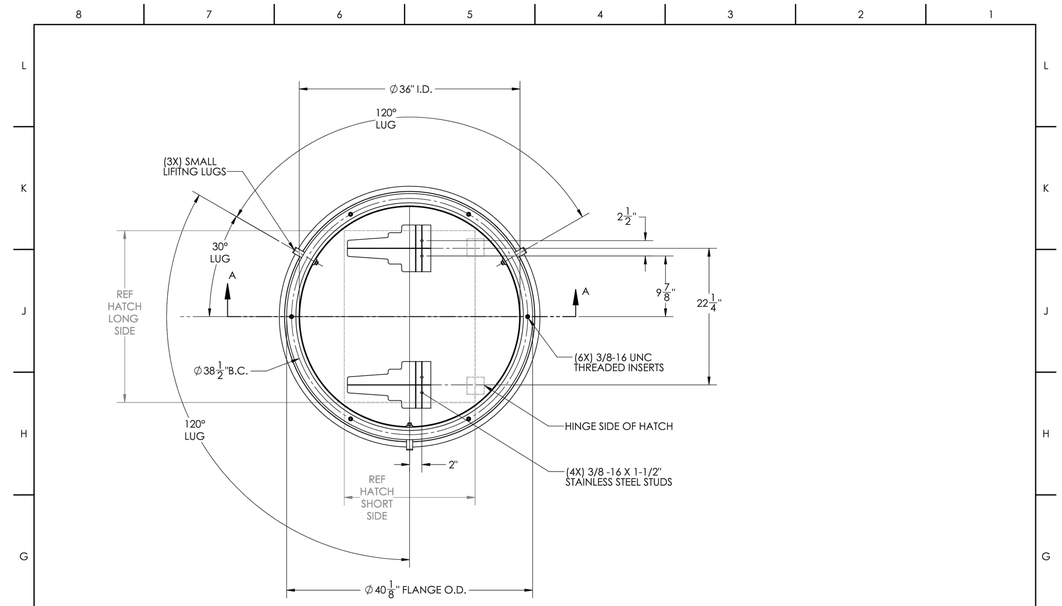

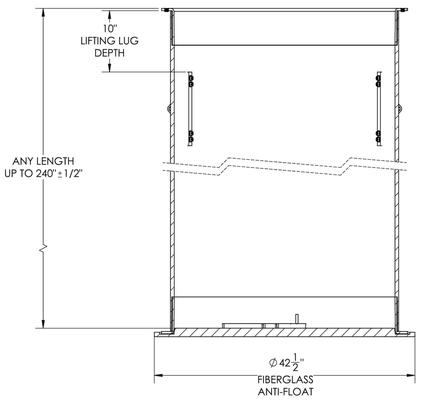

SECTION A-A
SCALE 1 : 10

*NOTES:
- TOPP INDUSTRIES PART NUMBER
  - BASE PART #FB(D)X(H)
  - D=DIAMETER
  - H=HEIGHT
  - EX. FB36X96
- FIBERGLASS ANTI-FLOAT
- SMALL LIFTING LUGS REQUIRED ON TANKS OVER 96" TALL
- TANKS OVER 96" TALL MUST BE SHIPPED LAYING DOWN AND REQUIRE SKIDS
- SEE 7499000 DRAWING FOR SKIDS
- SEE 7498000 DRAWING FOR CASTERS
- FIBERGLASS WOUND TANK
- FOR ALL OTHER MODEL DATA REFER TO CAD MODEL
- REFER TO FIBERGLASS BASIN SPECIFICATION FOLDER IN PART DATA FOLDER FOR BASIN SPECIFICATION
- LIBERTY PART NUMBER
  - XT36DSX(ANY LENGTH)

SUFFIX
- SUFFIX -G = GEL COATED
- SUFFIX -DW = DOUBLE WALL
- SUFFIX -VE = VINYL ESTER MATERIAL

NEW DRAWING	A		06/15/22	RHD	
description of change	rev	project	date	initials	

Liberty Pumps®
7000 APPLE TREE AVENUE
BERGEN, N.Y. 14416
(585) 494-1817

drn by R.DUNLAP	tol: xx+/- .02"
	xxx+/- .005"
date 06/15/22	angles +/- 2°
scale SEE NOTE	unless otherwise noted
title 36" TANK, FIBERGLASS, DS	
part no. SEE NOTE	
drawing no. 36DS	sheet number of / sheet size C

DETAIL: STORMWATER PUMP AND WELL ASSEMBLY
NTS

DETAIL NO.: 3
REF SHEET: C4.00

Product Quotation

Liberty Pumps

7000 Apple Tree Ave.
Bergen NY 14416
Phone: 800-543-2550
Fax: 585-494-1839

Quote #	EPS99079 Rev B
By	Jon Emasie
Date	July 22, 2022

To: Gordon and Assoc
Attention: Kyle
Job:

Preassembled Duplex Sump System — **Model # EPS99079 Rev B**

Qty	Item/Description
2	240-2 Sump pumps, 1/4 HP, 115 V, 1 phase, capacities of 34 GPM , heads to 20' TDH, 25' power cord
1	AE24L=3 NEMA 4X duplex alternating control panel including three floats, aux. contacts, and integral audio/ visual high level alarm
1	36" dia. X 120" H fiberglass basin with Fiberglass anti-floatation flange with 2" side discharge. 2" Female Threaded PVC discharge coupling.
1	36" Steel Blank cover Traffic Rated
1	XF36000 Fiberglass flange for H20 traffic rated covers
2	Guide rail assembly, including Campbell-Hausfeld guide rail, 3/4" stainless steel rails, s/s lifting chain, etc.
1	(1) 4" Unmounted inlet hub
1	Miscellaneous hardware and plumbing, including PVC ball valves, PVC check valves, float bracket, PVC discharge pipe etc.
1	JB70 junction box, with watertight cable connectors and 2" conduit coupling
1	Labor & Fabrication

Complete System List Price: $27,740.00

Subject to approval, pump performance and materials of construction may vary. Please consult factory and / or product literature for actual performance and material of construction. Pump system startup not included on this quote, to be provided by others.

Warranty 3 Years
Freight Prepaid on orders over $3000.00 Net US for standard shipments. Jobsite deliveries may require additional charges
Shipment *Please check with factory before ordering for current lead times*
Returns Will incur a 25% restocking fee (custom items incur a 100% restocking fee)
Price Quoted prices valid for 30 days

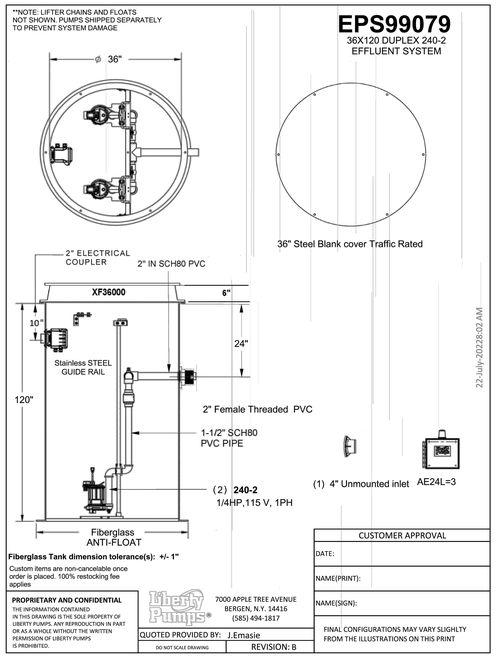

Fiberglass Tank dimension tolerance(s): +/- 1"
Custom items are non-cancelable once order is placed. 100% restocking fee applies

PROPRIETARY AND CONFIDENTIAL
THE INFORMATION CONTAINED IN THIS DRAWING IS THE SOLE PROPERTY OF LIBERTY PUMPS. ANY REPRODUCTION IN PART OR AS A WHOLE WITHOUT THE WRITTEN PERMISSION OF LIBERTY PUMPS IS PROHIBITED.

Liberty Pumps® 7000 APPLE TREE AVENUE BERGEN, N.Y. 14416 (585) 494-1817

QUOTED PROVIDED BY: J.Emasie
DO NOT SCALE DRAWING | REVISION: B

CUSTOMER APPROVAL
DATE:
NAME(PRINT):
NAME(SIGN):
FINAL CONFIGURATIONS MAY VARY SLIGHLTY FROM THE ILLUSTRATIONS ON THIS PRINT

STORMWATER PUMP SELECTION AND NOTES

1. PUMP MODEL: LIBERTY PUMPS 240-SERIES SUBMERSIBLE (OR APPROVED EQUAL)
2. PUMP OPERATION: DUPLEX ALTERNATING ONE PUMP DURING NORMAL CONDITIONS, TWO PUMPS RUNNING DURING HIGH ALARM
3. DESIGN POINT: TBD
4. POWER REQUIREMENT: ½ HP, 115V, 6 AMP
5. CONTROL PANEL: NEMA 4X
6. ON/OFF MECHANISM: THREE FLOATS, SET OFF / ON AT LEAST 12" APART TO PREVENT CYCLING

NOTES TO INSTALLER

1. SEE SHEET C4.00 FOR PUMP INSTALLATION LOCATION
2. SEE SHEET C4.00 FOR DISCHARGE LOCATION
3. FORCE MAIN TO BE 1-1/2" DIAMETER PVC WITH PRESSURE RATING OF AT LEAST 40 PSI
4. COORDINATE WITH PUMP VENDOR TO ACQUIRE ALL MATERIALS NEEDED FOR INSTALLATION, INCLUDING ELECTRICAL CABLES, FLOATS, INLET/OUTLET PENETRATIONS, BRACKETS OR RAILS FOR PUMPS, DISCHARGE CHECK VALVE, ETC.
5. SET PUMP OFF ELEVATION WITH 12" SUMP TO ALLOW FOR SOLIDS ACCUMULATION

DETAIL: STORMWATER PUMP AND WELL ASSEMBLY QUOTE
NTS

DETAIL NO.: 2
REF SHEET: C4.00

ALEXIS A. HAMBURGER
STATE OF WASHINGTON
22607
REGISTERED
PROFESSIONAL ENGINEER

7-26-2022

DESIGN	HL
DRAWN	HL
CHECKED	HL
SHEET ISSUE DATE	03.07.2022
DRAWING SETS	
PRE-APPLICATION	09/23/21
PERMIT	03/07/22
SET TITLE	DATE
SET TITLE	DATE

REVISIONS

#	DATE	DESCRIPTION
1	07.29.22	BLDG PERMIT REV 01

HL ENGINEERING
6040 California Ave SW
Suite C
Seattle, WA 98136

BRINDLEY RESIDENCE

ADDRESS T.B.D.
78xx - 79th AVE SE
MERCER ISLAND, WA 98040

PERMIT DRAWINGS

Stormwater Pump and Well Details

C4.50

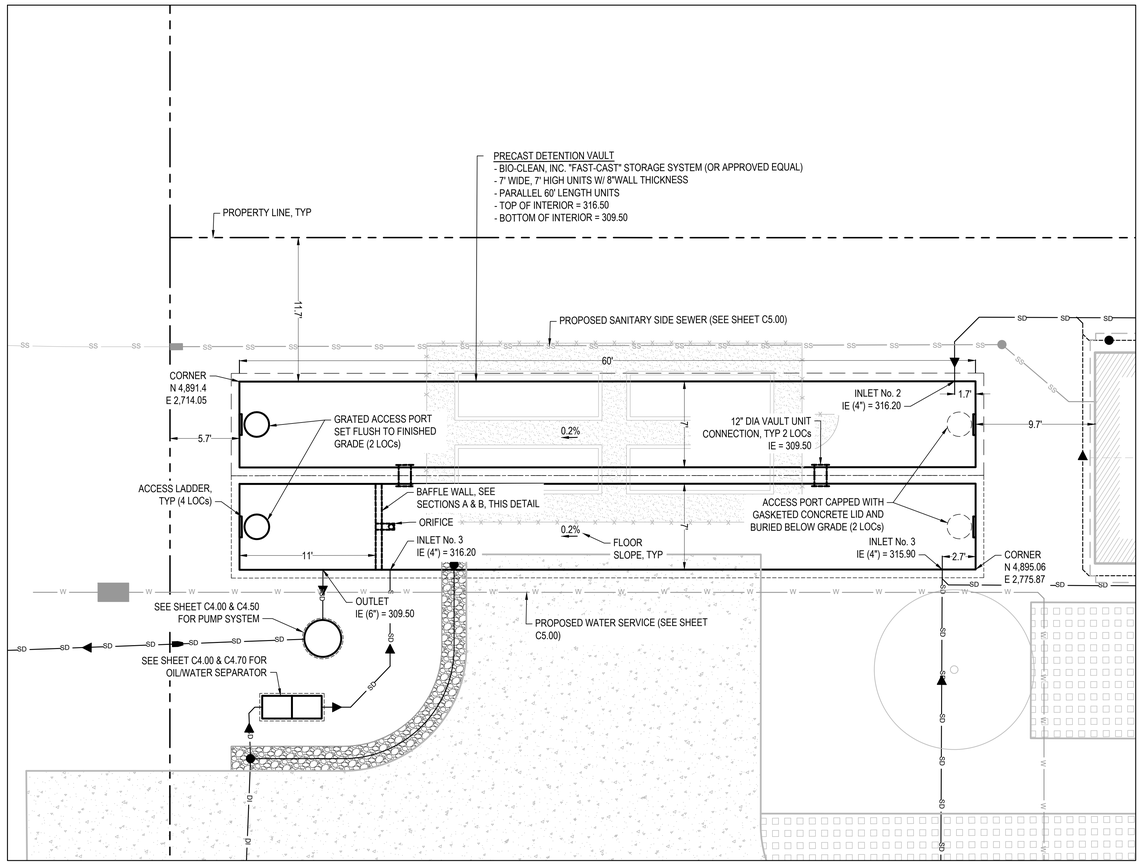

DETAIL: STORMWATER DETENTION SYSTEM
NTS

DETAIL NO.: 1
REF SHEET: C4.00

FastCast™ Drycast PreGasketed Stormwater Storage

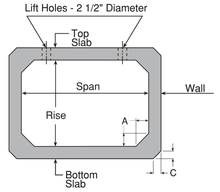

Typical Section

Standard Box Dimensions

Span (Ft.)	Rise (Ft.)	Top Slab (In.)	Bottom Slab (In.)	Wall (In.)	Weight (Lbs./ft.)
3	2	7	6	4	848
3	3	7	6	4	952
4	2	7 1/2	6	5	1146
4	3	7 1/2	6	5	1276
4	4	7 1/2	6	5	1405
5	2	8	7	6	1541
5	3	8	7	6	1696
5	4	8	7	6	1851
5	5	8	7	6	2006
6	2	8	7	7	1821
6	3	8	7	7	2002
6	4	8	7	7	2183
6	5	8	7	7	2364
6	6	8	7	7	2545
7	2	8	8	8	2238
7	3	8	8	8	2446
7	4	8	8	8	2652
7	5	8	8	8	2859
7	6	8	8	8	3066
7	7	8	8	8	3272

Standard Box Dimensions

Span (Ft.)	Rise (Ft.)	Top Slab (In.)	Bottom Slab (In.)	Wall (In.)	Weight (Lbs./ft.)
8	3	8	8	8	2652
8	4	8	8	8	2859
8	5	8	8	8	3066
8	6	8	8	8	3272
8	7	8	8	8	3479
8	8	8	8	8	3686
9	4	9	9	9	3511
9	5	9	9	9	3744
9	6	9	9	9	3976
9	7	9	9	9	4209
9	8	9	9	9	4441
9	9	9	9	9	4674
10	4	10	10	10	4228
10	5	10	10	10	4486
10	6	10	10	10	4745
10	7	10	10	10	5003
10	8	10	10	10	5261
10	9	10	10	10	5520
10	10	10	10	10	5778

Standard Box Dimensions

Span (Ft.)	Rise (Ft.)	Top Slab (In.)	Bottom Slab (In.)	Wall (In.)	Weight (Lbs./ft.)
11	4	11	11	11	5010
11	5	11	11	11	5294
11	6	11	11	11	5578
11	7	11	11	11	5862
11	8	11	11	11	6146
11	9	11	11	11	6430
11	10	11	11	11	6715
11	11	11	11	11	6999
12	4	12	12	12	5856
12	5	12	12	12	6166
12	6	12	12	12	6476
12	7	12	12	12	6786
12	8	12	12	12	7096
12	9	12	12	12	7406
12	10	12	12	12	7716
12	11	12	12	12	8026
12	12	12	12	12	8336

Note:
- A = Wall thickness
- C = 2" for 4", 5" and 6" wall
- C = 4" for 7" and greater wall
- Contact manufacturer for standard joint lengths.

-No Scale-
All dimensions subject to allowable specification tolerances.

TITLE	PLANT	STATE	SECTION/PAGE	DATE
Reinforced Concrete Precast Box Section	Grand Prairie Houston	TX	4.1	11-12-15

Bio Clean
A Forterra Company

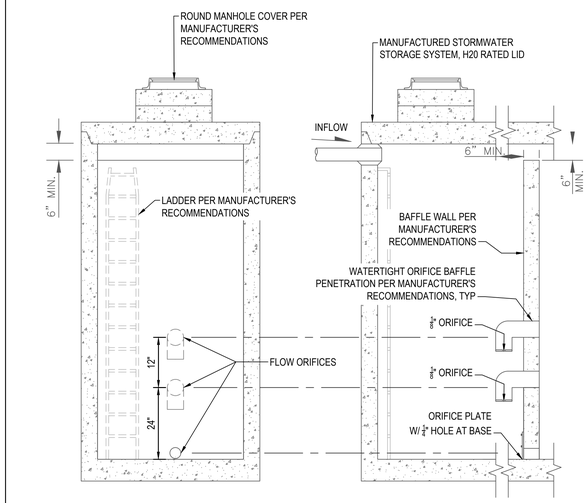

SECTION A SECTION B

DETAIL: FRENCH DRAIN
NTS

DETAIL NO.: 2
REF SHEET: C4.00

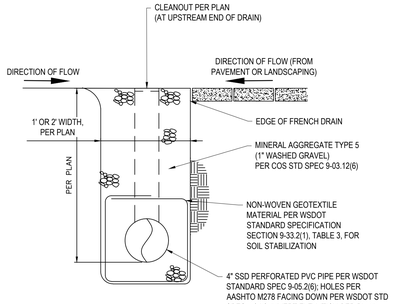

DETAIL: AREA DRAIN
NTS

DETAIL NO.: 3
REF SHEET: C4.00

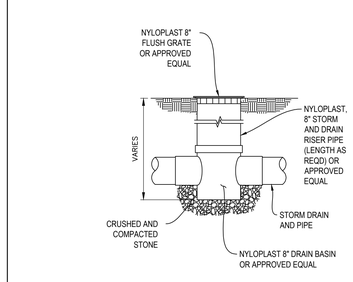

NOTES:

1. AREA DRAINS SHALL BE NYLOPLAST 8" CUSTOM BASIN (MODEL No. 2808AG__X) WITH FLUSH DUCTILE IRON "STANDARD" GRATE, OR APPROVED EQUAL.
2. INSTALL STRUCTURE AND GRATE IN ACCORDANCE WITH MANUFACTURER'S RECOMMENDATIONS.

DETAIL: SUBSURFACE FOUNDATION DRAIN
NTS

DETAIL NO.: 4
REF SHEET: C4.00

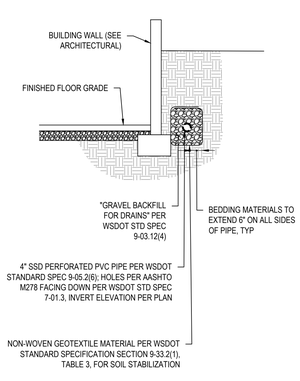

DETAIL: PRIVATE UTILITY CLEANOUT
NTS

DETAIL NO.: 5
REF SHEET: C4.00

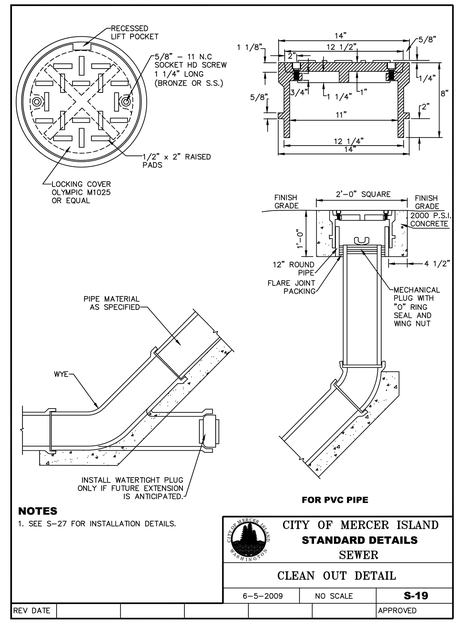

NOTES
1. SEE S-27 FOR INSTALLATION DETAILS.

CITY OF MERCER ISLAND
STANDARD DETAILS
SEWER
CLEAN OUT DETAIL

REV	DATE						APPROVED
					6-5-2009	NO SCALE	**S-19**

7-22-2022

DESIGN	HL
DRAWN	HL
CHECKED	HL
SHEET ISSUE DATE	03.07.2022

DRAWING SETS

PRE-APPLICATION	09/23/21
PERMIT	03/07/22
SET TITLE	DATE
SET TITLE	DATE

REVISIONS

#	DATE	DESCRIPTION
1	07.29.22	BLDG PERMIT REV 01

HL ENGINEERING

6040 California Ave SW
Suite C
Seattle, WA 98136

BRINDLEY RESIDENCE

ADDRESS T.B.D.
78xx - 79th AVE SE
MERCER ISLAND,
WA 98040

PERMIT DRAWINGS

Stormwater Detention System Details

C4.60

Oldcastle Precast®

Delivering Reliability

25-SA OIL WATER SEPERATOR

100 Gallon capacity

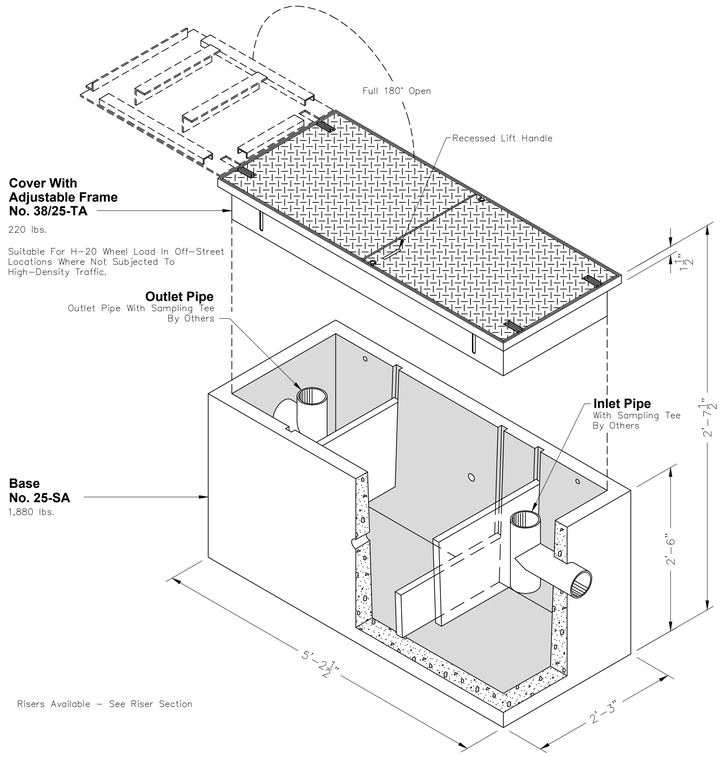

Risers Available – See Riser Section

Non Skid Covers Available

FOR DETAILS, SEE REVERSE>>

Items Shown Are Subject To Change Without Notice
Issue Date: April 2016

© 1980–2016 Oldcastle Precast, Inc.

Mailing Address
PO Box 588
Auburn, WA 98071

Phone: 800-892-1538
Fax: 253-735-4201
Email: opauburn@oldcastle.com

opauburn.com

Oldcastle Precast®

Delivering Reliability

25-SA

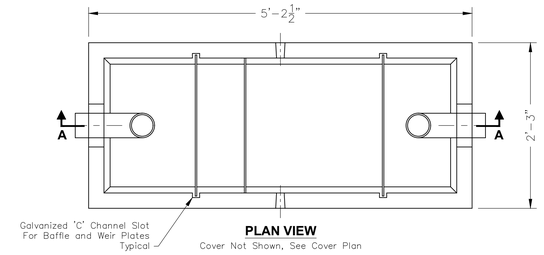

PLAN VIEW

Cover Not Shown, See Cover Plan

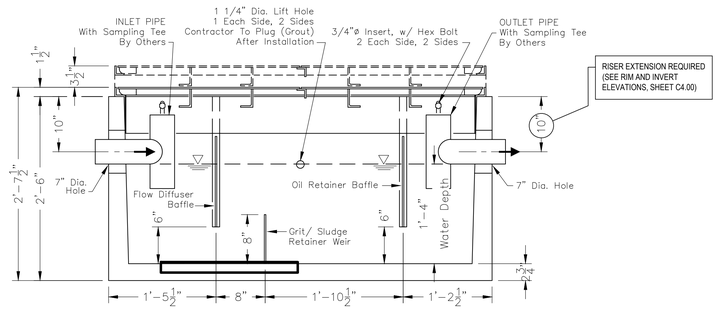

SECTION AA

STRUCTURAL NOTES:
1. Concrete: 28 Day Compressive Strength f'c= 7000 psi
2. Rebar: ASTM A-615 Grade 60
3. Mesh: ASTM A-185 Grade 65
4. Design: ACI-318-05 Building Code
   ASTM C-890 "Minimum Structural Design Loading For Underground Precast Concrete Water and Wastewater Structures"
5. Loads: HS-20 Truck Wheel w/ 30% Impact Per AASHTO

GENERAL NOTES:
1. All Baffles and Weirs To Be Steel
2. Contractor to:
   Supply and Install All Piping & Sampling Tees
   Grout In All Pipes
   Fill With Clean Water Prior To "Start-Up" Of System
   Verify All Blockout Sizes and Locations

FOR CUSTOM APPLICATIONS
THE FOLLOWING INFORMATION IS NEEDED:
Top Of Separator Elevation:
Inlet Pipe Size:
Inlet Pipe Elevation:
Outlet Pipe Size:
Outlet Pipe Elevation:

SCALE: 3/4"=1'-0"

© 1980–2016 Oldcastle Precast, Inc.

opauburn.com

DETAIL: STORMWATER OIL / WATER SEPARATION SYSTEM
NTS

DETAIL NO.: 1
REF SHEET: C4.00

7-26-2022

DESIGN	HL
DRAWN	HL
CHECKED	HL
SHEET ISSUE DATE	03.07.2022

DRAWING SETS

PRE-APPLICATION	09/23/21
PERMIT	03/07/22
SET TITLE	DATE
SET TITLE	DATE

REVISIONS

#	DATE	DESCRIPTION
1	07.29.22	BLDG PERMIT REV 01

HLENGINEERING

6040 California Ave SW
Suite C
Seattle, WA 98136

BRINDLEY RESIDENCE

ADDRESS T.B.D.
78xx - 79th AVE SE
MERCER ISLAND,
WA 98040

PERMIT DRAWINGS

Stormwater Control Details

C4.70

SITE UTILITY NOTES

1. WATER LINES LESS THAN 12" IN DIAMETER SHALL HAVE A MINIMUM OF 3.0 FEET OF COVER OVER THE TOP OF PIPE. WATER LINE 12" OR LARGER IN DIAMETER SHALL HAVE 4.0 FEET OF COVER OVER THE TOP OF PIPE. MAINTAIN A MINIMUM OF 12 INCHES CLEAR AT CROSSINGS WITH UTILITIES OTHER THAN SANITARY SEWER LINES. WATER LINE SHALL PASS UNDER THE OTHER UTILITY IF THE MINIMUM SPECIFIED COVER CANNOT BE OBTAINED.

2. MAINTAIN A MINIMUM OF 18 INCHES CLEAR BETWEEN CROSSINGS OF WATER LINE AND SANITARY SEWER LINES. WATER LINES SHALL CROSS ABOVE SANITARY SEWER LINES. SEE CITY OF MERCER ISLAND STANDARD DETAIL S-2.

3. PROVIDE HORIZONTAL AND VERTICAL BENDS WHERE INDICATED. WHERE A POINT OF INTERSECTION (HORIZONTAL OR VERTICAL) IS SHOWN AND THE DEFLECTION ANGLE IS MORE OR LESS THAN A STANDARD BEND, USE A COMBINATION OF THE STANDARD BEND AND JOINT DEFLECTION OF THE PIPE TO MEET THE ALIGNMENT SHOWN. MAXIMUM JOINT DEFLECTION IS 3 DEGREES OR THE MAXIMUM THAT IS RECOMMENDED BY THE PIPE MANUFACTURER, WHICHEVER IS SMALLER.

4. THE CONTRACTOR SHALL VERIFY ALL EXISTING AND NEW UTILITY CROSSINGS PRIOR TO WATER AND SANITARY SEWER SYSTEM INSTALLATION.

5. ALL TRENCHING FOR WATER LINES SHALL CONFORM TO CITY OF MERCER ISLAND STANDARD DETAIL W-3.

6. ALL TRENCHING FOR SANITARY SEWERS SHALL CONFORM TO CITY OF MERCER ISLAND STANDARD DETAILS S-3 AND S-4.

7. LENGTHS OF PIPING SHOWN ARE FROM CENTER OF STRUCTURE, FITTING OR POINT OF INTERSECTION AND ARE SHOWN FOR INFORMATION ONLY. ALL PIPING SHALL BE INSTALLED AT THE LOCATION SHOWN ON THE PLANS AND LOCATED BY COORDINATES OR DIMENSIONS.

8. VERIFY LOCATIONS OF LATERAL BUILDING CONNECTIONS WITH THE PLUMBING DRAWINGS PRIOR TO INSTALLATION.

9. PIPE MATERIALS SHALL BE AS FOLLOWS:

   9.1. SANITARY SEWER PIPE SHALL BE PER CITY OF SEATTLE STANDARD SPECIFICATION SECTION 9-05.4 "POLYVINYL CHLORIDE (PVC) PIPE".

   9.2. WATER SERVICE PIPING SHALL BE COPPER OR APPROVED EQUIVALANET WITH MINIMUM WORKING PRESSURE 160 LBS.

10. PRIOR TO FURNISHMENT OF SIDE SEWER MATERIALS, THE EXISTING SIDE SEWER CAP SHALL BE LOCATED, REMOVED, AND CLOSED-CAPTION TELEVISION (CCTV) PERFORMED FOR THE PORTION TO BE RE-USED WITHIN THE PUBLIC RIGHT OF WAY. THE CCTV FOOTAGE SHALL BE PROVIDED TO THE OWNER TO CONFIRM THE EXISTING SIDE SEWER'S ADEQUACY FOR RE-USE. IF THE EXISTING SIDE SEWER IS DETERMINED TO NOT BE IN SUITABLE CONDITION FOR RE-USE, A NEW 6" SIDE SEWER CONNECTION SHALL BE INSTALLED TO THE EXISTING 8" SANITARY MAIN (UNDER SEPARATE PERMIT WITH THE CITY OF MERCER ISLAND).

11. SANITARY SIDE SEWER CLEANOUTS SHALL BE PER CITY OF MERCER ISLAND STANDARD DETAILS No. S-18 AND S-19.

7808 79th AVE SE

SANITARY CONN TO BLDG
IE (6") = 318.00

SANITARY CLEANOUT (SEE NOTE No. 11)
RIM = 320.80
IE (6") = 317.65

6" SANITARY SIDE SEWER
L = 76.8'
S = 3.9%

28.9'

8.8'

STORM DRAINAGE SYSTEM (SEE SHEET C4.00)

INTERCEPT EXISTING SIDE SEWER CAP AT P/L (SEE NOTE 10)
IE (6") = 315+/-

EXISTING 8" SANITARY SEWER TO REMAIN

1-1/2" WATER METER W/ 2" SUPPLY LINE (UNDER SEPARATE PERMIT, COORD WITH CITY OF MERCER ISLAND)

WATER CONN TO BLDG

NEW BUILDING
79th Ave SE

TREE PROTECTION FENCE (SEE SHEET C1.00, TYP)

STREET CENTERLINE

EXISTING WATER MAIN TO REMAIN

79TH AVE ST

EXISTING 8" STORM DRAIN TO REMAIN

22.5'

PROPERTY LINE, TYP

EXISTING TREE TO REMAIN, TYP

7814 79th AVE SE

N 72°18'10" E 237.93'

N 72°18'10" E 157.45'

N 59°53'05" E 40.00'

N 72°18'10" E 20.00'

N 43°09'00" W 487.86' MEAS. (487.91' CALC'D PER R1)

BASIS OF BEARINGS

APPROX. LOCATION PER RECORDS (TYP)

20' ROW

70TH AVE SE

LOT 4

LOT 5

LOT 56

LOT 57

LOT 58

PARCEL# 3206000050

FOUND IRON PIPE 0.18'N & 0.19'E OF PROP COR

FOUND REBAR/CAP #31445 0.29'E OF PROP COR

FOUND IRON PIPE PROP COR

CB (TYPE 1)
RIM=317.90'
IE(NW.) 8"PVC=316.05'
IE(SE.) 8"PVC=316.10'

CB (TYPE 1)
RIM=317.67'
IE(SW.) 6"PVC=316.77'

CB (TYPE 1)
RIM=317.62'
IE(NW.) 8"PVC=316.32'
IE(NE.) 6"PVC=316.32'

FENCE 0.6'W

FENCE END 0.7'W

FENCE 0.5'W

FENCE 0.4'W

14" FIR

14" CED

12" FIR

24" FIR

24" DEC

10" DEC

8" DEC

8" CH

(2)6" DEC

44.4'

N 10°14'40" E 157.45'

N

10 0 10 20
scale 1" = 10' feet

7-26-2022

DESIGN HL
DRAWN HL
CHECKED HL
SHEET ISSUE DATE 03.07.2022

DRAWING SETS

PRE-APPLICATION	09/23/21
PERMIT	03/07/22
SET TITLE	DATE
SET TITLE	DATE

REVISIONS

#	DATE	DESCRIPTION
1	07.29.22	BLDG PERMIT REV 01

HLENGINEERING

6040 California Ave SW
Suite C
Seattle, WA 98136

BRINDLEY RESIDENCE

ADDRESS T.B.D.
78xx - 79th AVE SE
MERCER ISLAND,
WA 98040

PERMIT DRAWINGS

Water, Sewer, and Dry Utility Plan

C5.00

GENERAL NOTES

1. ALL WORK TO COMPLY WITH 2018 CITY AND STATE CODES WITH AMENDMENTS.
2. ALL APPLICABLE CODES, ORDINANCES AND MINIMUM STRUCTURAL REQUIREMENTS TAKE PRECEDENCE OVER ALL DRAWINGS, NOTES AND SPECIFICATIONS.
3. DO NOT SCALE DRAWINGS; USE PRINTED DIMENSIONS ONLY. NOTIFY ARCHITECT OF ANY OMISSIONS OR DISCREPANCIES BEFORE PROCEEDING WITH WORK IN QUESTION.
4. CONTRACTOR MUST CONTACT ARCHITECT IMMEDIATELY FOR ANY DISCREPANCIES IN CONTRACT DOCUMENTS OR EXISTING CONDITIONS PRIOR TO PROCEEDING WITH WORK.
5. CONTRACTOR MUST CONTACT ARCHITECT IMMEDIATELY FOR ANY DISCREPANCIES BETWEEN CONTRACT DOCUMENTS AND APPLICABLE CODES PRIOR TO PROCEEDING WITH WORK.
6. CONTRACTOR TO VERIFY ALL DIMENSIONS, GRADES AND EXISTING CONDITIONS BEFORE PROCEEDING WITH WORK.
7. CONTRACTOR SHALL VISIT THE SITE AND FAMILIARIZE HIMSELF/HERSELF WITH ALL ASPECTS OF THE WORK PRIOR TO CONTRACTING WITH THE OWNER TO PERFORM THE WORK.
8. CONTRACTOR SHALL VERIFY CONFORMANCE OF ACTUAL SOIL CONDITIONS WITH SOILS REPORT AND DESIGN ASSUMPTIONS.
9. CONTRACTOR SHALL BE RESPONSIBLE FOR ACQUIRING ALL NECESSARY PERMITS FOR THE WORK, EXCEPT FOR THE BUILDING PERMIT WHICH IS THE RESPONSIBILITY OF THE ARCHITECT.
10. GUARANTEE ON ALL MATERIALS AND WORKMANSHIP TO BE (1) YEAR FROM DATE OF COMPLETION UNLESS NOTED OTHERWISE IN CONTRACT.
11. REPETITIVE FEATURES MAY BE DRAWN ONLY ONCE. BUT SHALL BE PROVIDED AS IF DRAWN IN FULL. REPETITIVE NOTES MAY BE CALLED OUT ONLY ONCE AND INDICATED AS TYPICAL.
12. DIMENSIONS ARE TO FACE OF STUD OR FACE OF CONCRETE OR CENTERLINE OF INTERIOR COLUMNS UNLESS NOTED OTHERWISE.
13. THE CONTRACTOR IS RESPONSIBLE FOR COORDINATING MECHANICAL, ELECTRICAL AND PLUMBING CONTRACTORS AND NOTIFYING THE ARCHITECT OF ANY DISCREPANCIES IN FRAMING PRIOR TO PROCEEDING WITH WORK.
14. THIS PROJECT TO BE DESIGN-BUILD IN THE AREAS OF MECHANICAL, ELECTRICAL AND PLUMBING.

JOB SITE SAFETY

1. THE ARCHITECT HAS NOT BEEN RETAINED OR COMPENSATED TO PROVIDE DESIGN AND/OR CONSTRUCTION REVIEW SERVICES RELATING TO THE CONTRACTOR'S SAFETY PRECAUTIONS.
2. PERIODIC SITE VISITS PERFORMED BY THE ARCHITECT SHALL NOT BE CONSTRUED AS SUPERVISION OF ACTUAL CONSTRUCTION SAFETY PRECAUTIONS.
3. THE ARCHITECT IS NOT RESPONSIBLE FOR PROVIDING A SAFE PLACE FOR THE PERFORMANCE OF WORK BY THE CONTRACTOR OR THE CONTRACTOR'S EMPLOYEES OR EMPLOYEES OF SUPPLIERS OR SUBCONTRACTORS, OR FOR ACCESS, VISITS, USE, WORK, TRAVEL OR OCCUPANCY BY ANY PERSON.

SITE WORK

1. ALL EXCAVATION AND FILL SHALL BE STORED AND PROTECTED SUCH AS TO PREVENT RUN OFF OF MATERIAL TO ADJACENT PROPERTIES.
2. FOOTING DRAIN TO BE SEPARATE FROM ROOF AND IMPERVIOUS AREA DRAINS.
3. DOWNSPOUT DRAIN TO BE 4" DIAMETER TIGHTLINE UNLESS NOTED OTHERWISE.
4. FOOTING DRAIN TO BE 4" DIAMETER PERFORATED PIPE UNLESS NOTED OTHERWISE
5. CONTRACTOR IS RESPONSIBLE FOR COMPLYING WITH REQUIRED SEPTIC AND/OR STORM WATER DETENTION SYSTEMS.

EARTH WORK

1. EXTEND EXCAVATION DOWN TO UNDISTURBED SOIL OF THE SPECIFIED STRENGTH WITH A MINIMUM OF 18" BELOW LOWEST ADJACENT FINISH GRADE.
2. COMPACTED FILL TO BE WELL GRADED AND GRANULAR WITH NOT MORE THAN 5% PASSING A 200 SIEVE. PLACE IN 8" LOOSE LIFTS AND COMPACT TO 95% MODIFIED AASHO DENSITY AT OPTIMUM MOISTURE CONTENT.
3. BACKFILL BEHIND ALL RETAINING WALLS WITH FREE DRAINING GRANULAR FILL AND PROVIDE FOR SUBSURFACE DRAINAGE AS NOTED IN THE SOILS REPORT.

MOISTURE PROTECTION

1. PROVIDE PRESSURE TREATED PLATES BETWEEN CONCRETE AND FRAMING.
2. PROVIDE A MINIMUM OF 12" CLEAR BETWEEN WOOD GIRDERS AND EARTH.
3. PROVIDE A MINIMUM OF 18" CLEAR BETWEEN WOOD JOISTS AND EARTH.
4. PROVIDE A MINIMUM OF 8" CLEAR BETWEEN WOOD POSTS AND EARTH.
5. PROVIDE A MINIMUM OF 1" CLEAR BETWEEN WOOD POSTS AND CONCRETE FLOORS.
6. CAULK ALL OPENINGS THOROUGHLY.
7. FLASH ALL OPENINGS WITH A MINIMUM OF 26 GAUGE GALVANIZED STEEL TO ACCEPTABLE INDUSTRY STANDARDS.
8. METAL COPING AT PARAPET TO BE A MINIMUM OF 18 GAUGE GALVANIZED STEEL.

SAFETY AND SECURITY

1. DEADBOLTS WITH A MINIMUM THROW OF 1/2" AND A VIEWPORT ARE REQUIRED AT ALL EXTERIOR DOORS.
2. DEADBOLTS OR APPROVED LOCKING DEVICES ARE REQUIRED ON ALL SLIDING DOORS.
3. ALL LOCKS SHALL BE OPENABLE WITHOUT ANY SPECIAL KNOWLEDGE OR EFFORT.
4. WINDOWS WITHIN 10'-0" OF FINISHED GRADE SHALL BE PROVIDED WITH LATCHING DEVICES.
5. STAIRWAYS TO MEET THE FOLLOWING REQUIREMENTS: (OCCUPANCIES LESS THAN 10)

STAIR WIDTH	36" (Minimum)
TREAD WIDTH	10" (Minimum), 6" Minimum for Winders
RISER HEIGHT	7 3/4" (Maximum)
HEADROOM	80" (Minimum)
HANDRAIL HEIGHT	34" to 38" above nosing
HANDRAIL GRASP	1-1/4"(Min) to 2" (Max)

6. HANDRAIL INTERMEDIATE MEMBERS SHALL BE CONFIGURED AS TO PROHIBIT PASSING A 4" DIAMETER SPHERE THROUGH ANY OPENING.
7. GUARDRAILS SHALL BE A MINIMUM OF 36" ABOVE FINISH FLOOR.
8. GUARDRAIL INTERMEDIATE MEMBERS SHALL BE CONFIGURED AS TO PROHIBIT PASSING A 4" DIAMETER SPHERE THROUGH ANY OPENING.

ENERGY NOTES

1. ALL WORK SHALL COMPLY WITH THE RESIDENTIAL PROVISIONS OF THE 2018 WASHINGTON STATE ENERGY CODE (WSEC).
2. HEATING UNIT(S) SHALL MAINTAIN 70 DEGREES FAHRENHEIT AT 36" ABOVE FLOOR WHEN OUTSIDE TEMPERATURE IS 24 DEGREES FAHRENHEIT, OR CURRENT REQUIREMENTS.
3. AT LEAST ONE PROGRAMMABLE THERMOSTAT IS REQUIRED FOR THE REGULATION OF TEMPERATURE. PROVIDE NIGHT SETBACK THERMOSTAT.
4. CAULK ALL JOINTS AROUND EXTERIOR OPENINGS AND ALL JOINTS IN SIDING AND FLASHING WHERE INFILTRATION MAY BE POSSIBLE.
5. SEAL ALL TEARS AND JOINTS IN INSULATION WITH APPROVED TAPE.
6. SHOWER FLOW CONTROL SHALL BE LIMITED TO 2.5 GALLONS PER MINUTE, OR CURRENT REQUIREMENTS.
7. ALL CRAWLSPACES SHALL HAVE A MINIMUM OF 10 MIL BLACK VISQUEEN GROUND COVER EXTENDED OVER THE TOP OF THE FOOTINGS. LAP ALL JOINTS 12" MINIMUM.
8. FIREPLACE(S) SHALL HAVE TIGHT FITTING DAMPERS AND SHALL BE PROVIDED WITH A MINIMUM OF 6 SQUARE INCHES OF OUTSIDE COMBUSTIBLE AIR SUPPLY.
9. METAL DUCTS OUTSIDE THE CONDITIONED SPACE SHALL BE INSULATED TO R-8 MINIMUM PER THE 2018 WSEC, SECTION R403.2.1. PROVIDE WEATHER BARRIER IF LOCATED ON THE EXTERIOR OF THE BUILDING.
10. HOT WATER PIPES SHALL BE WRAPPED WITH INSULATION (R-4 MINIMUM) PER THE 2018 WSEC, SECTION R403.4.2.
11. WATER HEATER(S) SHALL MEET 1987 NATIONAL APPLIANCE ENERGY CONSERVATION ACT.
12. VAPOR RETARDER SHALL BE INSTALLED ON THE CONDITIONED ROOM SIDE OF THE INSULATION.
13. BLOWER DOOR TESTING: AIR LEAKAGE SHALL NOT EXCEED 4 AIR CHANGES/HOUR, AND SHALL BE TESTED PER THE 2018 WSEC, SECTION R402.4.1.2. PROVIDE A WRITTEN REPORT OF THE TEST RESULTS, SIGNED BY THE TESTING PARTY, TO THE BUILDING INSPECTOR, PRIOR TO APPROVED FINAL INSPECTION.
14. 90% MIN. OF LUMINAIRES TO BE HIGH EFFICACY LUMINARIES PER THE 2018 WASHINGTON STATE ENERGY CODE, SECTION R404.1. ALL EXTERIOR LIGHTING SHALL BE HIGH EFFICACY LUMINARIES.
15. EXISTING CEILING, WALL OR FLOOR CAVITIES EXPOSED DURING CONSTRUCTION FOUND UNINSULATED, OR WITH DAMAGED INSULATION, SHALL BE FILLED WITH R15 INSULATION AT 2X4 FRAMING AND R21 INSULATION AT 2X6 FRAMING PER WEC R101.4.3-EXCEPTION 3
16. DUCT LEAKAGE TEST RESULTS SHALL BE PROVIDED TO THE BUILDING INSPECTOR AND HOMEOWNER PRIOR TO AN APPROVED FINAL INSPECTION.

VENTILATION NOTES

1. VENTILATION AND EXHAUST SYSTEMS TO COMPLY WITH THE REQUIREMENTS OF CHAPTER 15 OF THE 2018 WASHINGTON STATE RESIDENTIAL CODE (WSRC).
2. SOURCE SPECIFIC FANS SHALL BE LOCATED IN ALL KITCHENS, BATHROOMS, WATER CLOSETS, AND LAUNDRY FACILITIES IN COMPLIANCE WITH THE 2018 WSRC, SECTION M1505.4.4. VENTILATION CAPACITY SHALL BE AT LEAST 50 C.F.M. FOR BATHROOMS AND WATER CLOSETS (INTERMITTENT USE) AND 100 C.F.M. FOR KITCHENS (INTERMITTENT USE). RANGE HOODS SHALL BE EXHAUSTED IN ACCORDANCE WITH SECTION M1503.
3. CLOTHES DRYERS SHALL BE EXHAUSTED IN ACCORDANCE WITH THE 2018 WSRC, SECTION M1502.3. DUCT LENGTH SHALL NOT EXCEED 35 FEET, PLUS THE LENGTH OF THE TRANSITION DUCT, LESS THE EQUIVALENT LENGTH OF FITTINGS PER TABLE M1502.4.4.1.
4. INTERMITTENT WHOLE HOUSE VENTILATION SYSTEM SHALL COMPLY WITH THE 2018 WSRC, SECTION M1505.4. INTERMITTENT VENTILATION SHALL OCCUR AT LEAST 25% OF EACH 4-HOUR SEGMENT. VENTILATION RATE SHALL BE NOT LESS THAN AS SPECIFIED BY TABLE M1505.4.3(1), MULTIPLIED BY THE RATE FACTOR INDICATED ON TABLE M1505.4.3(2). FAN SHALL HAVE A SONE RATING OF 1.0 OR LESS MEASURED AT 0.1 INCHES WATER GAUGE. OUTDOOR AIR SHALL BE PROVIDED TO ALL HABITABLE ROOMS.
5. EXHAUST DUCT WORK SHALL CONFORM TO THE 2018 WSRC, CHAPTER 16. EXHAUST DUCTING TERMINATIONS SHALL BE OUTSIDE THE BUILDING, SHALL BE LOCATED IN COMPLIANCE WITH SECTION M1506.2, AND SHALL BE EQUIPPED WITH BACKDRAFT DAMPERS.
6. SUPPLY DUCTS WITHIN CONDITIONED SPACE SHALL BE INSULATED TO A MINIMUM OF R-4.
7. PROVIDE A MINIMUM NET AREA OF 1 SQUARE FOOT OF VENTILATION AREA FOR EACH 300 SQUARE FEET OF CRAWLSPACE AREA. PLACE OPENINGS AS NEAR AS TO CORNERS AS PRACTICABLE AND SHALL PROVIDE CROSS VENTILATION.
8. ALL CRAWLSPACE VENTS SHALL BE PROVIDED WITH 1/4" NON-CORROSIVE WIRE MESH.
9. PROVIDE A MINIMUM NET AREA OF 1 SQUARE FOOT OF VENTILATION AREA FOR EVERY 150 SQUARE FEET OF ATTIC AREA. PROVIDE A CONTINUOUS 1 INCH MINIMUM AIR SPACE ABOVE INSULATION FOR CROSS VENTILATION.
10. ALL ATTIC VENTS SHALL BE PROVIDED WITH 1/4" NON-CORROSIVE WIRE MESH OR APPROVED SOFFIT VENTS

GLAZING NOTES

1. ALL GLAZING TO BE (2) PANE INSULATED GLASS OR BETTER UNLESS NOTED OTHERWISE.
2. SLIDING DOORS TO BE SAFETY GLASS, LAMINATED GLASS, OR TEMPERED GLASS.
3. SHOWER DOORS AND ENCLOSURES TO BE SAFETY GLASS, LAMINATED GLASS, OR TEMPERED GLASS.
4. REFER TO WINDOW SCHEDULE FOR ADDITIONAL REQUIREMENTS.
5. PROVIDE NATURAL LIGHT BY MEANS OF EXTERIOR GLAZED OPENINGS IN ACCORDANCE WITH SECTION R303.1 OR SHALL BE PROVIDED WITH ARTIFICIAL LIGHT IN ACCORDANCE WITH SECTION R303.1.

BATHROOM NOTES

1. WALL COVERINGS IN SHOWERS TO BE MOISTURE RESISTANT MATERIAL TO 72" (Minimum) ABOVE DRAIN INLET.
2. TOILET TO HAVE CLEAR SPACE OF 30" WIDE (Minimum) AND 24" CLEAR (Minimum) IN FRONT OF STOOL.

SHOP DRAWINGS

1. SHOP DRAWINGS ARE REVIEWED FOR DESIGN INTENT ONLY.
2. THE CONTRACTOR IS TO REVIEW AND APPROVE ALL SHOP DRAWINGS PRIOR TO SUBMITTING TO ARCHITECT OR STRUCTURAL ENGINEER.
3. SEE STRUCTURAL NOTES AND PROJECT SPECIFICATIONS FOR ADDITIONAL REQUIREMENTS AND CLARIFICATIONS REGARDING SHOP DRAWINGS.

FIRE PROTECTION

1. THE GARAGE SHALL BE SEPARATED FROM THE RESIDENCE AND ITS ATTIC BY NOT LESS THAN THE FOLLOWING:
   A. 5/8" GYPSUM WALLBOARD REQUIRED AT ALL WALLS SEPARATING GARAGE AND DWELLING.
   B. NOT LESS THAN (1) LAYER OF 1/2" GYPSUM WALLBOARD AT CEILINGS, OR 5/8" TYPE "X" GPYSUM WALLBOARD IF THERE ARE HABITABLE ROOMS ABOVE THE GARAGE.
   C. 1-3/8" MINIMUM THICK SOLID CORE OR HONEYCOMB CORE STEEL DOOR, OR A 20-MIN. FIRE-RATED DOOR, EQUIPPED WITH AN AUTOMATIC CLOSER.
   D. DUCTS PIERCING FIRE SEPARATION TO BE A MINIMUM OF 26 GAUGE, AND HAVE NO OPENINGS INTO THE GROUP "U" OCCUPANCY.
2. FIRE SEPARATION TO BE HORIZONTAL AND VERTICAL INCLUDING ALL STRUCTURAL MEMBERS SUPPORTING THE FIRE SEPARATION.
3. ALL ENCLOSED USEABLE SPACE UNDER STAIRWAYS SHALL BE (1) LAYER OF 5/8" TYPE "X" GYPSUM WALLBOARD ON ENCLOSED SIDE.
4. SMOKE ALARMS SHALL MEET 2018 WASHINGTON FIRE CODE 907.2.11.2 AND MERCER ISLAND FIRE MARSHAL'S OFFICE "HOUSEHOLD FIRE ALARM STANDARD." SMOKE ALARMS SHALL BE HARDWIRED, PROVIDED A BATTERY BACKUP, AND INTERCONNECTED WITHIN EACH DWELLING UNIT. IN ORDER TO REDUCE THE CHANCES OF NUISANCE ACTIVATIONS, SMOKE ALARMS SHOULD NOT BE LOCATED NEAR KITCHEN APPLIANCES.
5. SMOKE DETECTORS SHALL BE AUDIBLE IN ALL SLEEPING ROOMS, AND OUTSIDE EACH SLEEPING AREA IN THE IMMEDIATE VICINITY OF THE BEDROOMS.
6. A MINIMUM OF (1) SMOKE DETECTOR SHALL BE INSTALLED ON EACH FLOOR INCLUDING THE GARAGE.
7. FIRESTOPPING AND DRAFTSTOPPING SHALL CONSIST OF 2" NOMINAL LUMBER.
8. FIRESTOPPING AND DRAFTSTOPPING IS REQUIRED IN THE FOLLOWING PLACES:
   A. CONCEALED SPACES AT ALL FLOOR AND CEILING LEVELS AND AT 10 FOOT INTERVALS ALONG THE LENGTH OF THE WALL.
   B. INTERCONNECTIONS BETWEEN CONCEALED VERTICAL AND HORIZONTAL SPACES (i.e. Soffits)
   C. CONCEALED SPACES BETWEEN STAIR STRINGERS AT TOP AND BOTTOM OF THE RUN.
9. ROCK WOOL AROUND ALL OPENINGS FOR VENTS, PIPES, DUCTS, ETC.
10. EMERGENCY EGRESS WINDOWS SHALL MEET THE FOLLOWING REQUIREMENTS:

CLEAR OPEN WIDTH	20" (Minimum)
CLEAR OPEN HEIGHT	24" (Minimum)
CLEAR OPEN AREA	5.7 s.f. (Minimum)
SILL HEIGHT	44" (Maximum)

11. PREFABRICATED FIREPLACES SHALL BEAR U.L. OR I.C.B.O. SEAL OF APPROVAL AND SHALL BE INSTALLED PER MANUFACTURER INSTRUCTIONS.
12. APPLIANCE GENERATING A GLOW, A SPARK, OR FLAME MAY BE INSTALLED IN THE GARAGE PROVIDED THE HEATING ELEMENTS AND SWITCHES ARE 18" ABOVE THE FLOOR.
13. GARAGE FLOOR TO BE CONSTRUCTED OF NON COMBUSTIBLE MATERIAL (CONCRETE).
14. CARBON MONOXIDE ALARMS SHALL MEET 2018 WASHINGTON FIRE CODE 908.7. USE OF COMBINATION SMOKE ALARM/CARBON MONOXIDE ALARM DEVICES IS ACCEPTABLE.
15. NO STORAGE OR USE OF FLAMMABLE OR COMBUSTIBLE LIQUIDS, TORCH CUTTING OR WELDING OPERATIONS, OPEN FLAME WORK, GRINDING THAT PRODUCES SPARKS, ROOFING OPERATIONS, OR USE OF FLAMMABLE GAS FOR TEMPORARY HEATING OR DRYING SHALL BE CONDUCTED ON ANY CONSTRUCTION SITE WITHOUT FIRST HAVING OBTAINED A SPECIFIC PERMIT FROM THE MERCER ISLAND FIRE DEPARTMENT FOR THESE HAZARDOUS ACTIVITIES. THIS INCLUDES DEMOLITION WORK.
16. IF THERE IS AN EXISTING UNUSED UNDERGROUND HEATING OIL TANK AT THE SITE, IT SHALL BE DECOMMISSIONED AND REMOVED FROM THE SITE IN ACCORDANCE WITH THE 2018 WASHINGTON FIRE CODE CHAPTER 57. SUCH WORK SHALL ONLY BE CONDUCTED BY A CERTIFIED UNDERGROUND STORAGE TANK DECOMMISSIONER, AND MAY REQUIRE A MERCER ISLAND FIRE DEPARTMENT PERMIT.
17. EGRESS, SEPARATION, FIRE PROTECTION SYSTEMS, AND EMERGENCY ACCESS SHALL MEET THE REQUIREMENTS OF 2018 WASHINGTON FIRE CODE CHAPTER 33 DURING CONSTRUCTION. CONTRACTOR MATERIALS AND ACTIVITIES SHALL NOT BLOCK ACCESS TO OR EGRESS FROM ANY BUILDING WHILE THE BUILDING IS OCCUPIED. CONTRACTOR MATERIALS AND ACTIVITIES SHALL NOT BLOCK ACCESS, OR IMPAIR FIRE SEPARATION IN THE ADJACENT AREAS. THIS INCLUDES DEMOLITION WORK AND ALSO APPLIES TO NEIGHBORING AREAS, SPACES, AND BUILDINGS.

DRAWING LEGEND

SYMBOL	DESCRIPTION	REMARKS
2	WINDOW SYMBOL	SEE WINDOW SCHEDULE
A	DOOR SYMBOL	SEE DOOR SCHEDULE
202	ROOM NUMBER	
5	GRID LINE	
T. O. WALL 27' - 4"	VERTICAL DATUM POINT	
MATCHLINE / DWG / SHEET	MATCHLINE	
DWG / SHEET	SECTION CUT REFERENCE	SEE SECTION SHEETS
DWG # / DWG # / SHEET / DWG # / DWG #	INTERIOR / EXTERIOR ELEVATION REFERENCE	SEE ELEVATION SHEETS
DWG / SHEET	DETAIL REFERENCE	SEE DETAIL SHEETS
SA	SMOKE ALARM	SEE A-1.1 GENERAL NOTES, FIRE PROTECTION SECTION
SA/CO	SMOKE ALARM AND CARBON MONOXIDE DETECTOR	SEE A-1.1 GENERAL NOTES, FIRE PROTECTION SECTION
100 CFM	EXHAUST FAN	EXHAUST VENTS MUST TERMINATE AT THE EXTERIOR OF THE STRUCTURE, WITH CLEARANCES PER SECTION M1506.2
	WALL	EXTERIOR WALLS • 2X6 STUDS PER STRUCT. • 5/8" GWB @ INTERIOR INTERIOR WALLS • 2X6 STUDS U.N.O. • 5/8" GWB @ EA. SIDE
	ENHANCED ACUSTIC WALL	• STAGGERED 2X4 STUDS @ 24" O.C. ON 2X6 SILL PLATE W/ CONT. WOVEN ROCK WOOL SOUND BATTS • (2) LAYERS OF 5/8" GWB @ EA. SIDE, W/ OFFSET JOINTS
	ACOUSTIC WALL	• (2) LAYERS OF 5/8" GWB, FACING NOISE-PRODUCING ROOM, W/ OFFSET JOINTS • STAGGERED 2X4 STUDS @ 24" O.C. ON 2X6 SILL PLATE W/ CONT. WOVEN ROCK WOOL SOUND BATTS • (1) LAYER OF 5/8" GWB
	FOUNDATION WALL	• CONC. WALL PER STRUCT.

ABBREVIATION LIST

AB	ANCHOR BOLT	KD	KILN DRIED
ABV	ABOVE		
AC	AIR CONDITIONING	LAM	LAMINATED
ACT	ACOUSTICAL TILE	LB	POUNDS
ADDT	ADDITIONAL	LF	LINEAL FOOT
ADJ	ADJUSTABLE	LH	LEFT HAND
AFF	ABOVE FINISH FLOOR	LL	LIVE LOAD
AGG	AGGREGATE	LT	LIGHT
ALT	ALTERNATE	LTG	LIGHTING
ALUM	ALUMINUM		
APPR	APPROXIMATE	MATL	MATERIAL
ARCH	ARCHITECT/ARCHITECTURAL	MAX	MAXIMUM
ASPH	ASPHALT	MB	MACHINE BOLT
		MC	MEDICINE CABINET
BD	BOARD	MECH	MECHANICAL
BEL	BELOW	MEMB	MEMBRANE
BLDG	BUILDING	MFR	MANUFACTURER
BLK	BLOCKING	MIN	MINIMUM
BM	BEAM	MIR	MIRROR
BO	BY OTHERS	MISC	MISCELLANEOUS
BO	BOTTOM OF	MTL	METAL
BOF	BOTTOM OF FOOTING		
BOT	BOTTOM	N	NORTH
BOW	BOTTOM OF WALL	NA	NOT APPLICABLE
BRG	BEARING	NFVA	NET FREE VENT AREA
BSMT	BASEMENT	NIC	NOT IN CONTRACT
BTWN	BETWEEN	NO	NUMBER
BUR	BUILT UP ROOFING	NOM	NOMINAL
		NTS	NOT TO SCALE
CAB	CABINET		
CAP	CAPACITY	O/	OVER
CATV	CABLE TELEVISION	OBSC	OBSCURE
CB	CATCH BASIN	OC	ON CENTER
CIP	CAST IN PLACE	OD	OUTSIDE DIAMETER
CJ	CONTROL JOINT	OD	OVERHEAD DRAIN
CL	CENTER LINE	OH	OVERHEAD
CLG	CEILING	OPNG	OPENING
CLKG	CAULKING	OPP	OPPOSITE
CLR	CLEAR		
CMU	CONCRETE MASONRY UNIT	PBD	PARTICLE BOARD
CNTR	CENTER	PERF	PERFORATED
CO	CLEAN OUT	PERP	PERPENDICULAR
COL	COLUMN	PH	PAPER HOLDER
CONC	CONCRETE	PL	PLATE
CONST	CONSTRUCTION	PL	PROPERTY LINE
CONT	CONTINUOUS	PLAM	PLASTIC LAMINATE
CONTR	CONTRACTOR	PLYWD	PLYWOOD
CPT	CARPET	POL	POLISHED
CRV	CONTINUOUS RIDGE VENT	PR	PAIR
CSMT	CASEMENT	PSF	POUNDS PER SQUARE FOOT
CT	CERAMIC TILE	PSI	POUNDS PER SQUARE INCH
CY	CUBIC YARD	PT	PRESSURE TREATED
		PTD	PAINTED
d	PENNY		
D	DEEP	QT	QUARRY TILE
D	DRYER	QTY	QUANTITY
DBL	DOUBLE		
DIA	DIAMETER	R	RADIUS
DIAG	DIAGONAL	R	RISER
DIM	DIMENSION	RD	ROOF DRAIN
DN	DOWN	REF	REFRIGERATOR
DR	DOOR	REINF	REINFORCING
DS	DOWNSPOUT (EXTERIOR)	REQD	REQUIRED
DTL	DETAIL	RH	RIGHT HAND
DW	DISHWASHER	RJ	ROOF JACK/VENT
DWG	DRAWING	RM	ROOM
DWR	DRAWER	RO	ROUGH OPENING
		RV	RIDGE VENT
E	EAST		
EA	EACH	S	SOUTH
EJ	EXPANSION JOINT	SB	SETBACK
EL	ELEVATION	SB	SAND BLAST
ELEC	ELECTRIC	SC	SOLID CORE
ELEV	ELEVATION	SCHED	SCHEDULE
ENCL	ENCLOSURE	SF	SQUARE FOOT
ENG	ENGINEER	SHMTL	SHEET METAL
EQ	EQUAL	SHTHG	SHEATHING
EQUIP	EQUIPMENT	SIM	SIMILAR
EW	EACH WAY	SPECS	SPECIFICATIONS
EXIST	EXISTING	SQ	SQUARE
EXT	EXTERIOR	SS	STAINLESS
		SS STL	STAINLESS STEEL
FB	FLAT BAR	STD	STANDARD
FD	FLOOR DRAIN	STL	STEEL
FF	FINISH FLOOR	STOR	STORAGE
FIN	FINISH	STRUC	STRUCTURAL
FLASH	FLASHING	SV	SOFFIT VENT
FLR	FLOOR	SYM	SYMBOL
FLUOR	FLUORESCENT		
FND	FOUNDATION	T	TREAD
FO	FACE OF	TEL	TELEPHONE
FOC	FACE OF CONCRETE	TEMP	TEMPERED
FOF	FACE OF FINISH	TEMP	TEMPERATURE
FOS	FACE OF STUD	T&G	TONGUE AND GROOVE
FRMG	FRAMING	THK	THICK
FT	FOOT/FEET	TO	TOP OF
FTG	FOOTING	TOP	TOP OF PLATE
		TOS	TOP OF SLAB
GA	GAUGE	TOW	TOP OF WALL
GAL	GALLON	TV	TELEVISION
GALV	GALVANIZED	TYP	TYPICAL
GFI	GROUND FAULT INTERRUPTER		
GL	GLASS	UNO	UNLESS NOTED OTHERWISE
GLB	GLUE LAMINATED BEAM		
GR	GRADE	VCT	VINYL COMPOSITION TILE
GWB	GYPSUM WALL BOARD	VTE	VENTED TO EXTERIOR
GYP	GYPSUM	VER	VERIFY
		VERT	VERTICAL
H	HEIGHT	VG	VERTICAL GRAIN
HB	HOSE BIBB		
HC	HOLLOW CORE	W	WEST
HD	HEAVY DUTY	W	WATT
HDR	HEADER	W	WIDTH
HDWD	HARDWOOD	W/	WITH
HDWR	HARDWARE	W/O	WITHOUT
HGR	HANGER	WC	WATER CLOSET
HORZ	HORIZONTAL	WD	WOOD
HR	HOUR	WP	WATERPROOF
HT	HEIGHT	WR	WATER RESISTANT
HWT	HOT WATER TANK	WS	WOOD SCREW
		WT	WEIGHT
ID	INSIDE DIAMETER	WWM	WELDED WIRE MESH
IDS	INTERIOR DOWNSPOUT		
IN	INCH	YD	YARD
INSUL	INSULATION		
INT	INTERIOR		
JST	JOIST		
JT	JOINT		

MATERIAL SYMBOL LEGEND

SYMBOL	DESCRIPTION	SYMBOL	DESCRIPTION
	EARTH / COMPACT FILL		ROUGH WOOD FRAMING
	GRAVEL / POROUS FILL		WOOD BLOCKING
	CONCRETE		PLYWOOD
	CMU / BRICK / STONE VENEER		FINISH WOOD
	GYPSUM WALL BOARD / PLASTER WALL		BATT INSULATION
	STEEL OR OTHER METAL		RIGID INSULATION
	NATURAL STONE		

All drawings, specifications, plans, ideas, arrangements, and designs represented or referred to are the property of and owned by Stuart Silk Architects whether the project for which they are made is executed or not. They were created, evolved, developed and produced for the sole use on and in connection with this project and none of the above may be disclosed or given to or used by any person, firm, or corporation for any use or purpose whatsoever including any other project, except upon written permission of Stuart Silk Architects.

© COPYRIGHT 2022
STUART SILK ARCHITECTS

3257 REGISTERED ARCHITECT
STUART TAYLOR SILK
STATE OF WASHINGTON

DESIGN
DRAWN
CHECKED
SHEET ISSUE DATE 03/07/22

DRAWING SETS
PRE-APPLICATION 09/23/21
PERMIT 03/07/22

REVISIONS

#	DATE	DESCRIPTION

Stuart Silk Architects

2400 N. 45th Street
Seattle, WA 98103

WWW.STUARTSILK.COM

BRINDLEY RESIDENCE

ADDRESS T.B.D.
78xx - 79TH AVE. SE
MERCER ISLAND,
WA 98040

PERMIT NO. 2203-116
PRICING DRAWINGS

GENERAL NOTES

A-1.1

PLOT DATE: 7/29/2022 12:02:57 PM

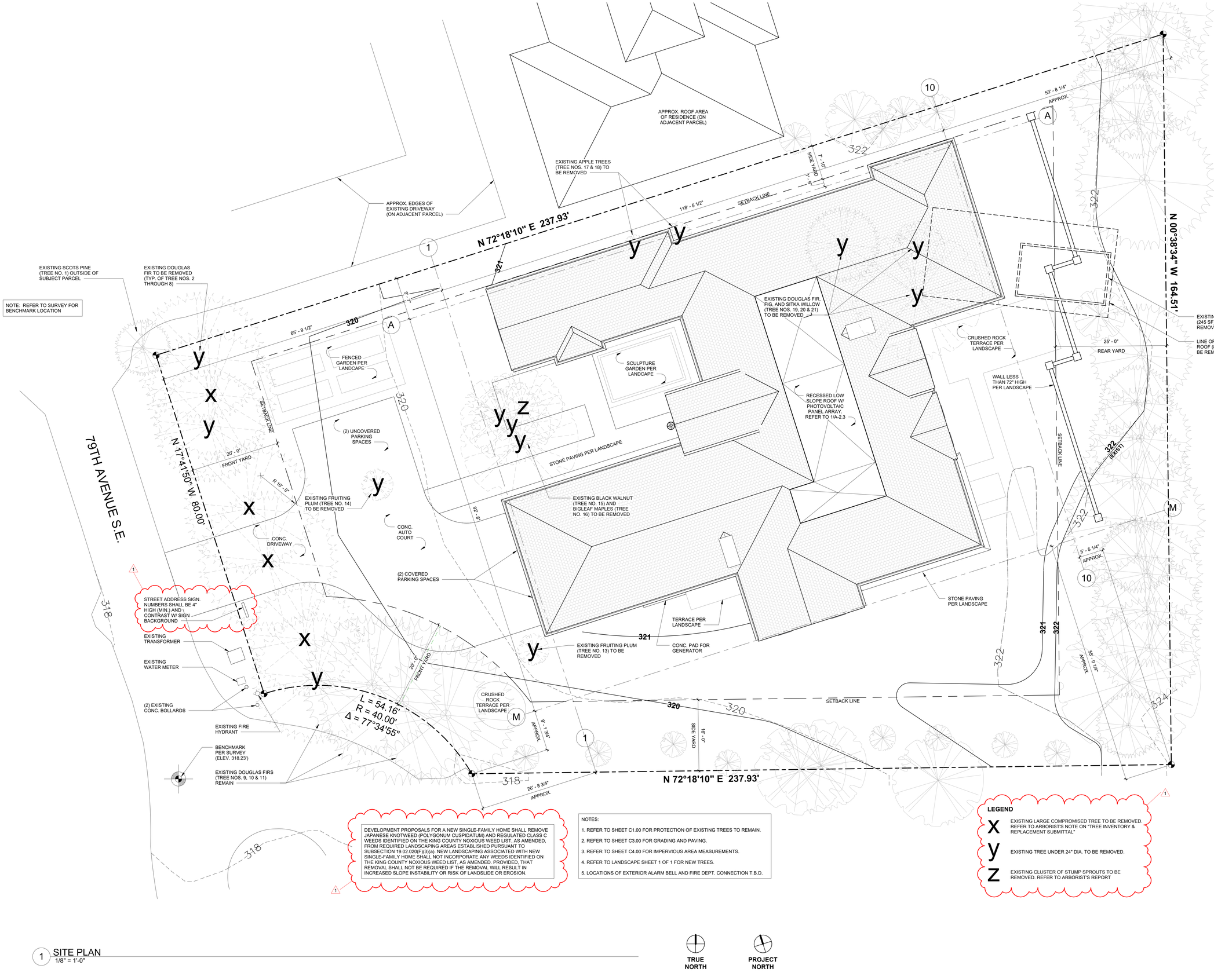

DEVELOPMENT PROPOSALS FOR A NEW SINGLE-FAMILY HOME SHALL REMOVE JAPANESE KNOTWEED (POLYGONUM CUSPIDATUM) AND REGULATED CLASS C WEEDS IDENTIFIED ON THE KING COUNTY NOXIOUS WEED LIST, AS AMENDED, FROM REQUIRED LANDSCAPING AREAS ESTABLISHED PURSUANT TO SUBSECTION 19.02.020(F)(3)(a). NEW LANDSCAPING ASSOCIATED WITH NEW SINGLE-FAMILY HOME SHALL NOT INCORPORATE ANY WEEDS IDENTIFIED ON THE KING COUNTY NOXIOUS WEED LIST, AS AMENDED. PROVIDED, THAT REMOVAL SHALL NOT BE REQUIRED IF THE REMOVAL WILL RESULT IN INCREASED SLOPE INSTABILITY OR RISK OF LANDSLIDE OR EROSION.

NOTES:

1. REFER TO SHEET C1.00 FOR PROTECTION OF EXISTING TREES TO REMAIN.
2. REFER TO SHEET C3.00 FOR GRADING AND PAVING.
3. REFER TO SHEET C4.00 FOR IMPERVIOUS AREA MEASUREMENTS.
4. REFER TO LANDSCAPE SHEET 1 OF 1 FOR NEW TREES.
5. LOCATIONS OF EXTERIOR ALARM BELL AND FIRE DEPT. CONNECTION T.B.D.

LEGEND

- x — EXISTING LARGE COMPROMISED TREE TO BE REMOVED. REFER TO ARBORIST'S NOTE ON "TREE INVENTORY & REPLACEMENT SUBMITTAL"
- y — EXISTING TREE UNDER 24" DIA. TO BE REMOVED.
- z — EXISTING CLUSTER OF STUMP SPROUTS TO BE REMOVED. REFER TO ARBORIST'S REPORT

1 SITE PLAN
1/8" = 1'-0"

TRUE NORTH

PROJECT NORTH

All drawings, specifications, plans, ideas, arrangements, and designs represented or referred to are the property of and owned by Stuart Silk Architects whether the project for which they are made is executed or not. They were created, evolved, developed and produced for the sole use on and in connection with this project and none of the above may be disclosed or given to or used by any person, firm, or corporation for any use or purpose whatsoever including any other project, except upon written permission of Stuart Silk Architects.

© COPYRIGHT 2022
STUART SILK ARCHITECTS

3257 REGISTERED ARCHITECT
STUART TAYLOR SILK
STATE OF WASHINGTON

DESIGN	SNS, ESH
DRAWN	ESH
CHECKED	ANC
SHEET ISSUE DATE	03/07/22
DRAWING SETS	
	PRE-APPLICATION 09/23/21
	PERMIT 03/07/22

REVISIONS

#	DATE	DESCRIPTION
1	07/29/22	PERMIT REVISIONS

Stuart Silk Architects

2400 N. 45th Street
Seattle, WA 98103

WWW.STUARTSILK.COM

BRINDLEY RESIDENCE

ADDRESS T.B.D.
78xx - 79TH AVE. SE
MERCER ISLAND, WA 98040

PERMIT NO. 2203-116
PRICING DRAWINGS

SITE PLAN

A-1.2

PLOT DATE: 7/29/2022 12:02:58 PM

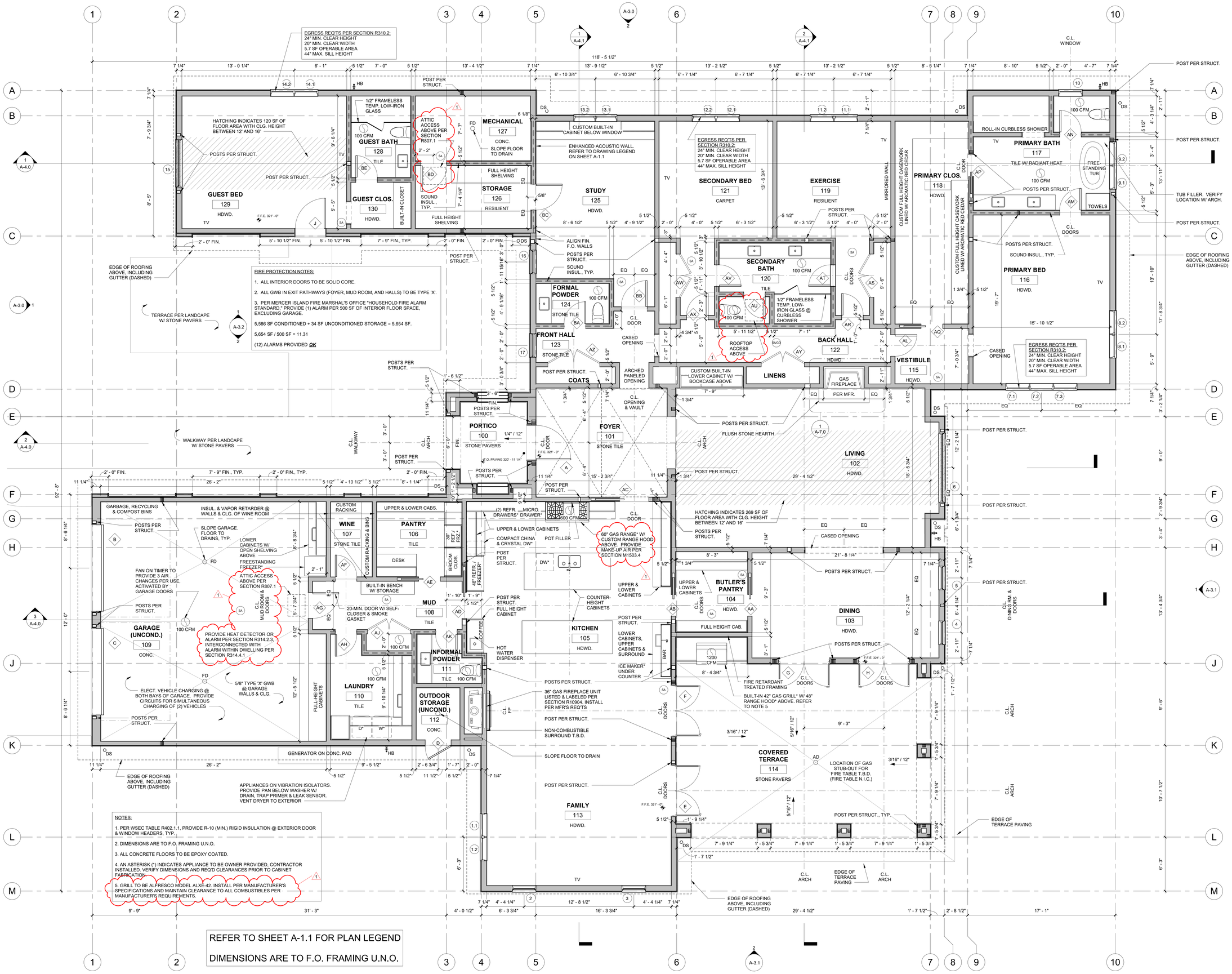

1 MAIN FLOOR PLAN
1/4" = 1'-0"

All drawings, specifications, plans, ideas, arrangements, and designs represented or referred to are the property of and owned by Stuart Silk Architects whether the project for which they are made is executed or not. They were created, evolved, developed and produced for the sole use on and in connection with this project and none of the above may be disclosed or given to or used by any person, firm, or corporation for any use or purpose whatsoever including any other project, except upon written permission of Stuart Silk Architects.

© COPYRIGHT 2022
STUART SILK ARCHITECTS

3257 REGISTERED ARCHITECT
STUART TAYLOR SILK
STATE OF WASHINGTON

DESIGN	SNS, ESH
DRAWN	ESH
CHECKED	ANC
SHEET ISSUE DATE	03/07/22
DRAWING SETS	
	PRE-APPLICATION 09/23/21
	PERMIT 03/07/22

REVISIONS

#	DATE	DESCRIPTION
1	07/29/22	PERMIT REVISIONS

Stuart Silk Architects
2400 N. 45th Street
Seattle, WA 98103
WWW.STUARTSILK.COM

BRINDLEY RESIDENCE

ADDRESS T.B.D.
78xx - 79TH AVE. SE
MERCER ISLAND,
WA 98040

PERMIT NO. 2203-116
PRICING DRAWINGS

FLOOR PLAN

A-2.1

PLOT DATE: 7/29/2022 12:03:00 PM

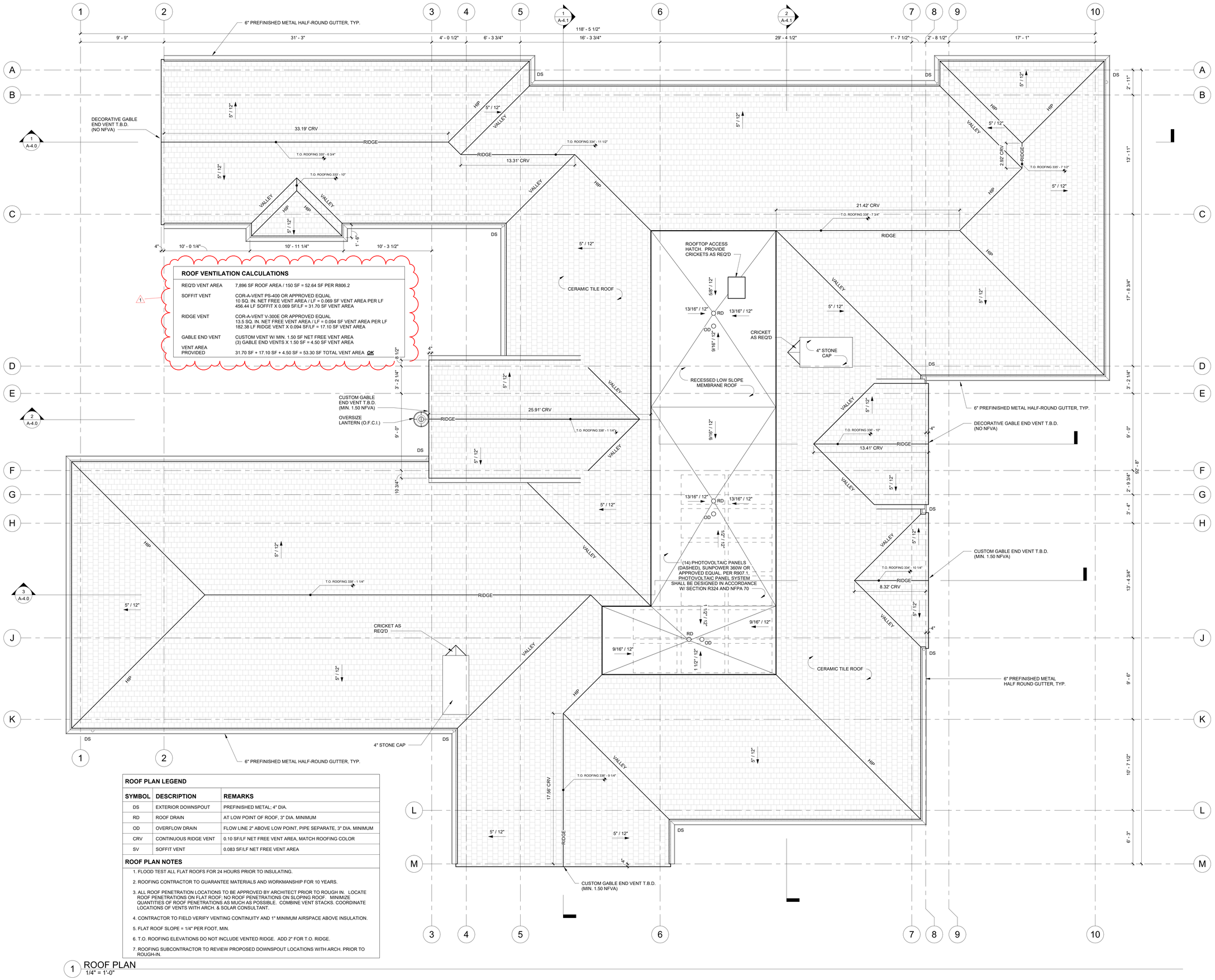

ROOF VENTILATION CALCULATIONS

REQ'D VENT AREA	7,896 SF ROOF AREA / 150 SF = 52.64 SF PER R806.2
SOFFIT VENT	COR-A-VENT PS-400 OR APPROVED EQUAL 10 SQ. IN. NET FREE VENT AREA / LF = 0.069 SF VENT AREA PER LF 456.44 LF SOFFIT X 0.069 SF/LF = 31.70 SF VENT AREA
RIDGE VENT	COR-A-VENT V-300E OR APPROVED EQUAL 13.5 SQ. IN. NET FREE VENT AREA / LF = 0.094 SF VENT AREA PER LF 182.38 LF RIDGE VENT X 0.094 SF/LF = 17.10 SF VENT AREA
GABLE END VENT	CUSTOM VENT W/ MIN. 1.50 SF NET FREE VENT AREA (3) GABLE END VENTS X 1.50 SF = 4.50 SF VENT AREA
VENT AREA PROVIDED	31.70 SF + 17.10 SF + 4.50 SF = 53.30 SF TOTAL VENT AREA ***OK***

ROOF PLAN LEGEND

SYMBOL	DESCRIPTION	REMARKS
DS	EXTERIOR DOWNSPOUT	PREFINISHED METAL; 4" DIA.
RD	ROOF DRAIN	AT LOW POINT OF ROOF, 3" DIA. MINIMUM
OD	OVERFLOW DRAIN	FLOW LINE 2" ABOVE LOW POINT, PIPE SEPARATE, 3" DIA. MINIMUM
CRV	CONTINUOUS RIDGE VENT	0.10 SF/LF NET FREE VENT AREA, MATCH ROOFING COLOR
SV	SOFFIT VENT	0.083 SF/LF NET FREE VENT AREA

ROOF PLAN NOTES

1. FLOOD TEST ALL FLAT ROOFS FOR 24 HOURS PRIOR TO INSULATING.
2. ROOFING CONTRACTOR TO GUARANTEE MATERIALS AND WORKMANSHIP FOR 10 YEARS.
3. ALL ROOF PENETRATION LOCATIONS TO BE APPROVED BY ARCHITECT PRIOR TO ROUGH IN. LOCATE ROOF PENETRATIONS ON FLAT ROOF; NO ROOF PENETRATIONS ON SLOPING ROOF. MINIMIZE QUANTITIES OF ROOF PENETRATIONS AS MUCH AS POSSIBLE. COMBINE VENT STACKS. COORDINATE LOCATIONS OF VENTS WITH ARCH. & SOLAR CONSULTANT.
4. CONTRACTOR TO FIELD VERIFY VENTING CONTINUITY AND 1" MINIMUM AIRSPACE ABOVE INSULATION.
5. FLAT ROOF SLOPE = 1/4" PER FOOT, MIN.
6. T.O. ROOFING ELEVATIONS DO NOT INCLUDE VENTED RIDGE. ADD 2" FOR T.O. RIDGE.
7. ROOFING SUBCONTRACTOR TO REVIEW PROPOSED DOWNSPOUT LOCATIONS WITH ARCH. PRIOR TO ROUGH-IN.

1 ROOF PLAN
1/4" = 1'-0"

All drawings, specifications, plans, ideas, arrangements, and designs represented or referred to are the property of and owned by Stuart Silk Architects whether the project for which they are made is executed or not. They were created, evolved, developed and produced for the sole use on and in connection with this project and none of the above may be disclosed or given to or used by any person, firm, or corporation for any use or purpose whatsoever including any other project, except upon written permission of Stuart Silk Architects.

© COPYRIGHT 2022
STUART SILK ARCHITECTS

3257 REGISTERED ARCHITECT
STUART TAYLOR SILK
STATE OF WASHINGTON

DESIGN	SNS, ESH
DRAWN	ESH
CHECKED	ANC
SHEET ISSUE DATE	03/07/22
DRAWING SETS	
	PRE-APPLICATION 09/23/21
	PERMIT 03/07/22

REVISIONS

#	DATE	DESCRIPTION
1	07/29/22	PERMIT REVISIONS

Stuart Silk Architects

2400 N. 45th Street
Seattle, WA 98103

WWW.STUARTSILK.COM

BRINDLEY RESIDENCE

ADDRESS T.B.D.
78xx - 79TH AVE. SE
MERCER ISLAND,
WA 98040

PERMIT NO. 2203-116
PRICING DRAWINGS

ROOF PLAN

A-2.3

PLOT DATE: 7/29/2022 12:03:01 PM

All drawings, specifications, plans, ideas, arrangements, and designs represented or referred to are the property of and owned by Stuart Silk Architects whether the project for which they are made is executed or not. They were created, evolved, developed and produced for the sole use on and in connection with this project and none of the above may be disclosed or given to or used by any person, firm, or corporation for any use or purpose whatsoever including any other project, except upon written permission of Stuart Silk Architects.

© COPYRIGHT 2022
STUART SILK ARCHITECTS

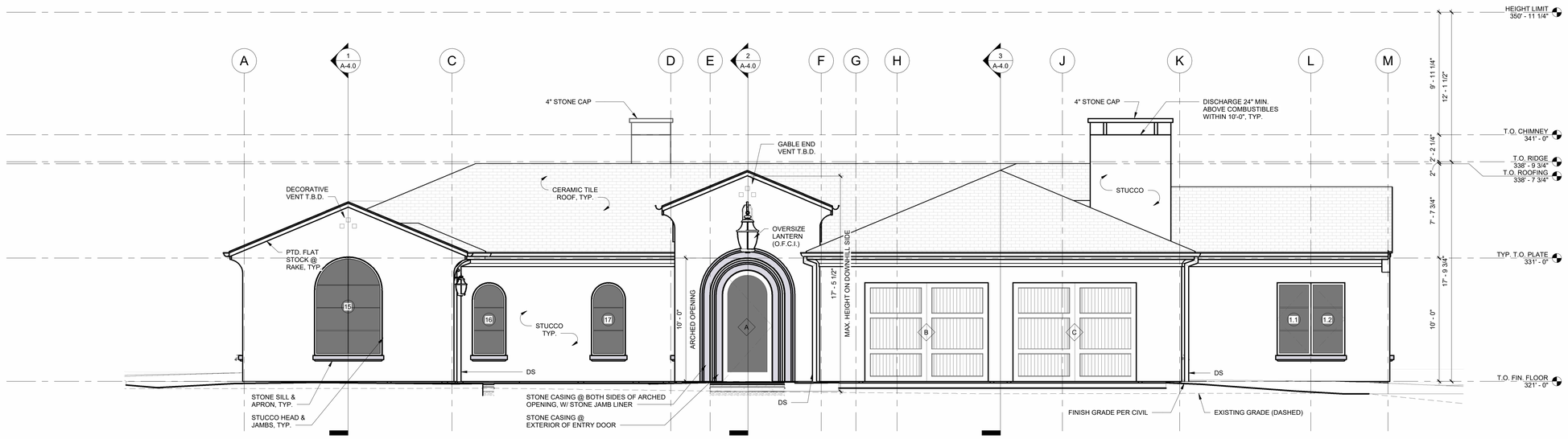

1 WEST ELEVATION
1/4" = 1'-0"

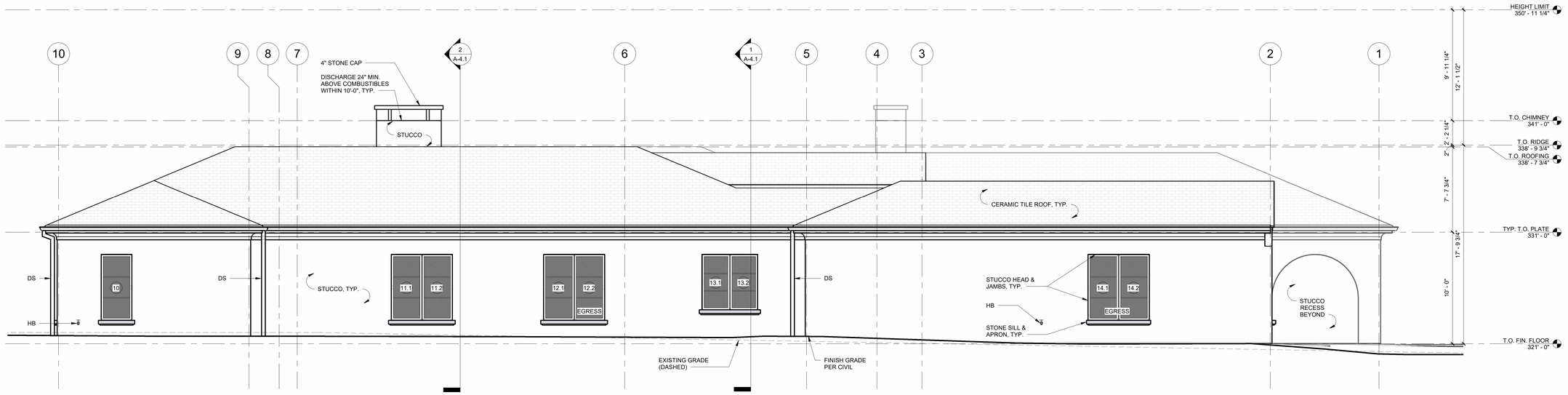

2 NORTH ELEVATION
1/4" = 1'-0"

3257
REGISTERED ARCHITECT
STUART TAYLOR SILK
STATE OF WASHINGTON

DESIGN	SNS, ESH
DRAWN	ESH
CHECKED	ANC
SHEET ISSUE DATE	03/07/22
DRAWING SETS	
	PRE-APPLICATION 09/23/21
	PERMIT 03/07/22

REVISIONS

#	DATE	DESCRIPTION

Stuart Silk Architects

2400 N. 45th Street
Seattle, WA 98103

WWW.STUARTSILK.COM

BRINDLEY RESIDENCE

ADDRESS T.B.D.
78xx - 79TH AVE. SE
MERCER ISLAND, WA 98040

PERMIT NO. 2203-116
PRICING DRAWINGS

EXTERIOR ELEVATIONS
WEST & NORTH

A-3.0

PLOT DATE: 7/29/2022 12:03:08 PM

All drawings, specifications, plans, ideas, arrangements, and designs represented or referred to are the property of and owned by Stuart Silk Architects whether the project for which they are made is executed or not. They were created, evolved, developed and produced for the sole use on and in connection with this project and none of the above may be disclosed or given to or used by any person, firm, or corporation for any use or purpose whatsoever including any other project, except upon written permission of Stuart Silk Architects.

© COPYRIGHT 2022
STUART SILK ARCHITECTS

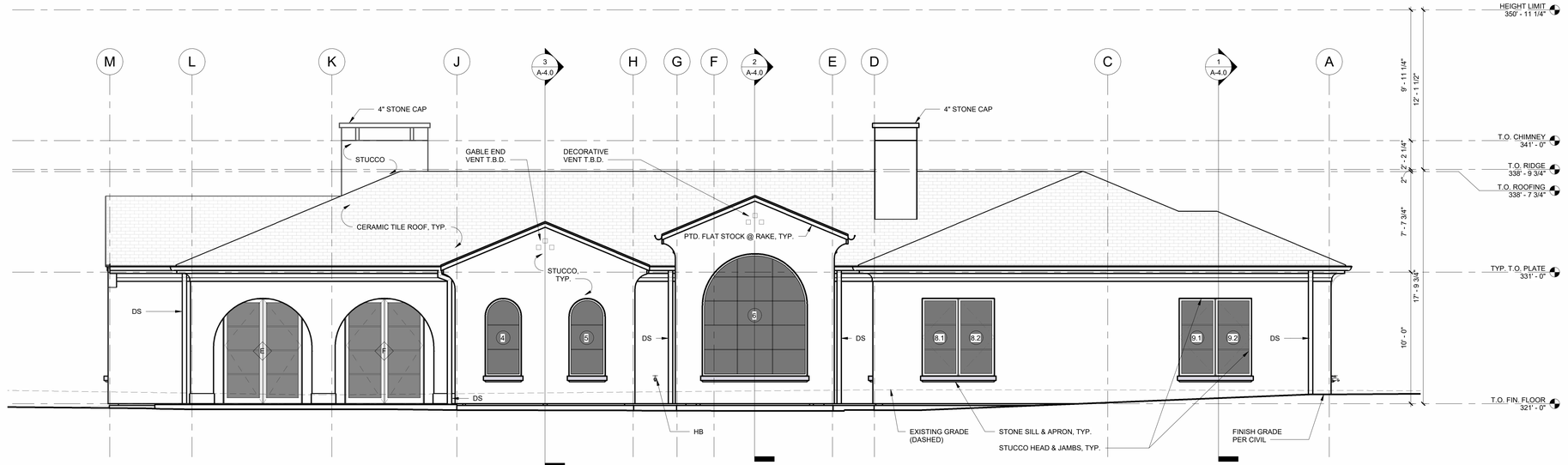

1 EAST ELEVATION
1/4" = 1'-0"

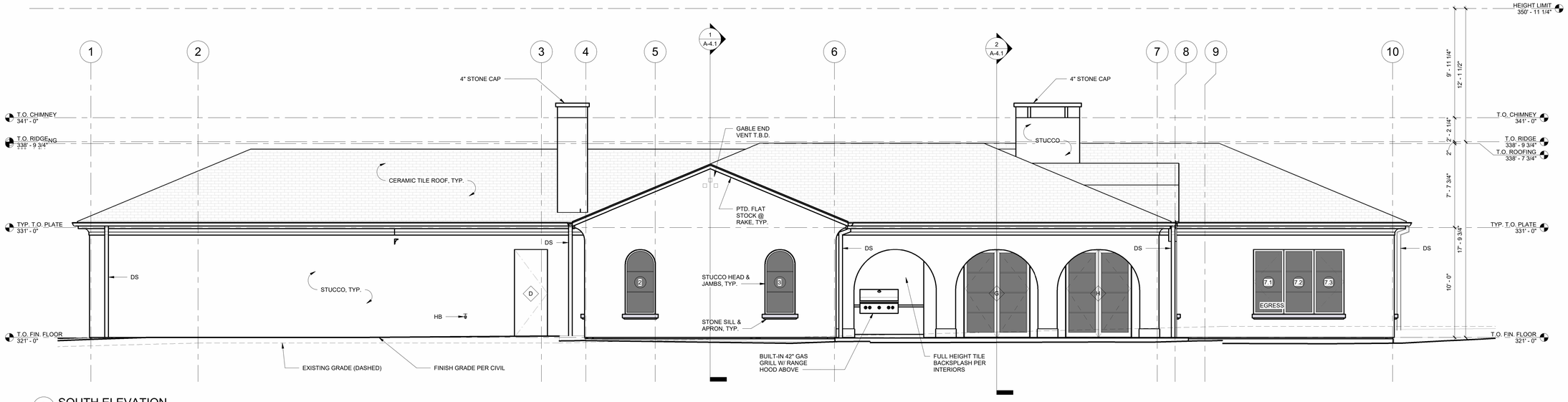

2 SOUTH ELEVATION
1/4" = 1'-0"

3257
REGISTERED ARCHITECT
STUART TAYLOR SILK
STATE OF WASHINGTON

DESIGN	SNS, ESH
DRAWN	ESH
CHECKED	ANC
SHEET ISSUE DATE	03/07/22
DRAWING SETS	
	PRE-APPLICATION 09/23/21
	PERMIT 03/07/22

REVISIONS

#	DATE	DESCRIPTION

Stuart Silk Architects

2400 N. 45th Street
Seattle, WA 98103

WWW.STUARTSILK.COM

BRINDLEY RESIDENCE

ADDRESS T.B.D.
78xx - 79TH AVE. SE
MERCER ISLAND,
WA 98040

PERMIT NO. 2203-116
PRICING DRAWINGS

EXTERIOR ELEVATIONS
EAST & SOUTH

A-3.1

PLOT DATE: 7/29/2022 12:03:15 PM

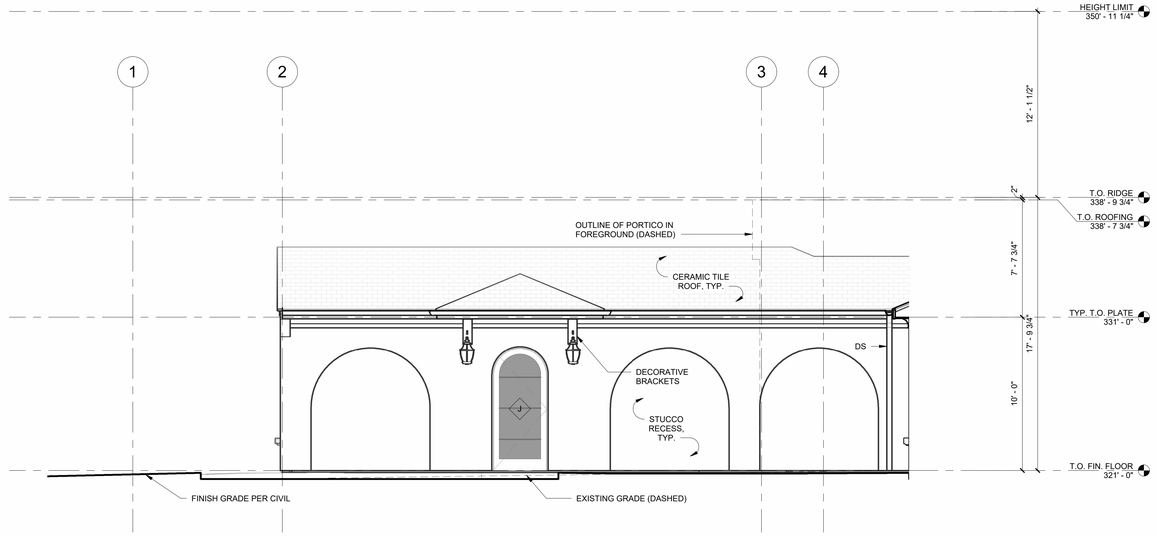

1 COURTYARD NORTH ELEVATION
1/4" = 1'-0"

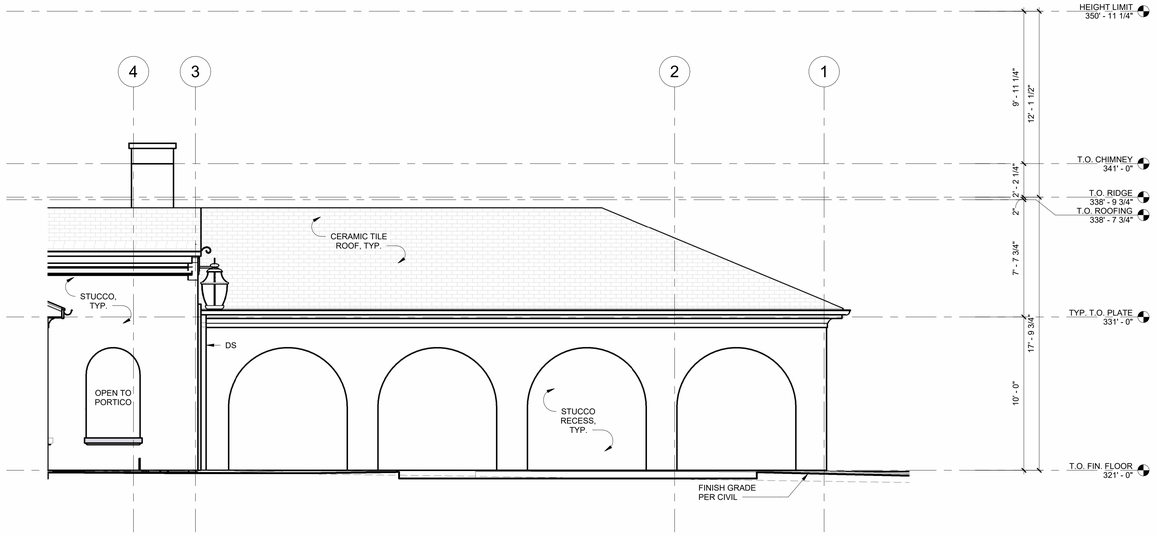

2 COURTYARD SOUTH ELEVATION
1/4" = 1'-0"

All drawings, specifications, plans, ideas, arrangements, and designs represented or referred to are the property of and owned by Stuart Silk Architects whether the project for which they are made is executed or not. They were created, evolved, developed and produced for the sole use on and in connection with this project and none of the above may be disclosed or given to or used by any person, firm, or corporation for any use or purpose whatsoever including any other project, except upon written permission of Stuart Silk Architects.

© COPYRIGHT 2022
STUART SILK ARCHITECTS

3257
REGISTERED ARCHITECT
STUART TAYLOR SILK
STATE OF WASHINGTON

DESIGN	SNS, ESH
DRAWN	ESH
CHECKED	ANC
SHEET ISSUE DATE	03/07/22
DRAWING SETS	
	PRE-APPLICATION 09/23/21
	PERMIT 03/07/22

REVISIONS

#	DATE	DESCRIPTION

Stuart Silk Architects

2400 N. 45th Street
Seattle, WA 98103

WWW.STUARTSILK.COM

BRINDLEY RESIDENCE

ADDRESS T.B.D.
78xx - 79TH AVE. SE
MERCER ISLAND,
WA 98040

PERMIT NO. 2203-116
PRICING DRAWINGS

EXTERIOR ELEVATIONS
MISCELLANEOUS

A-3.2

PLOT DATE: 7/29/2022 12:03:21 PM

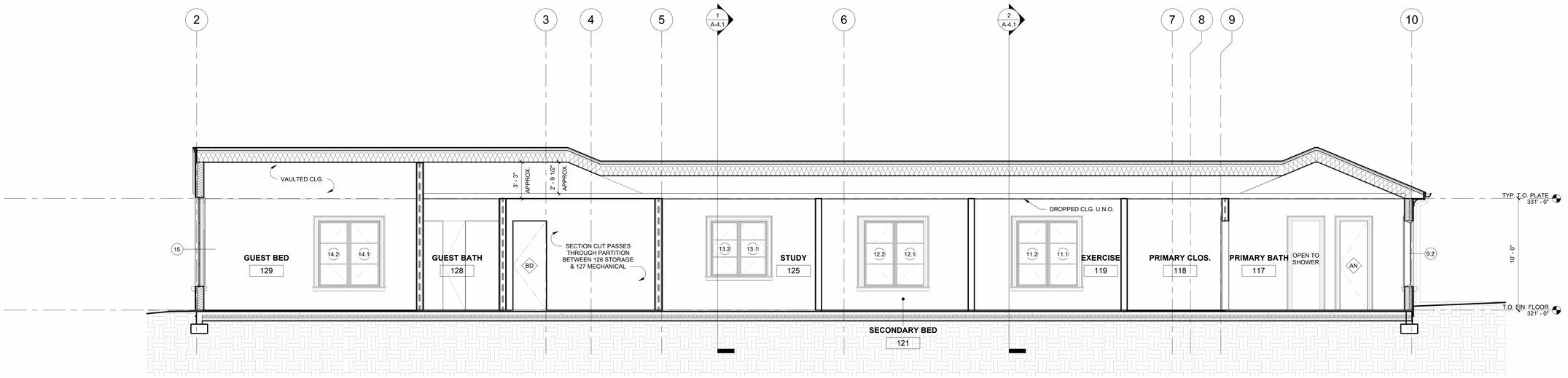

1 BUILDING SECTION @ NORTH WING
1/4" = 1'-0"

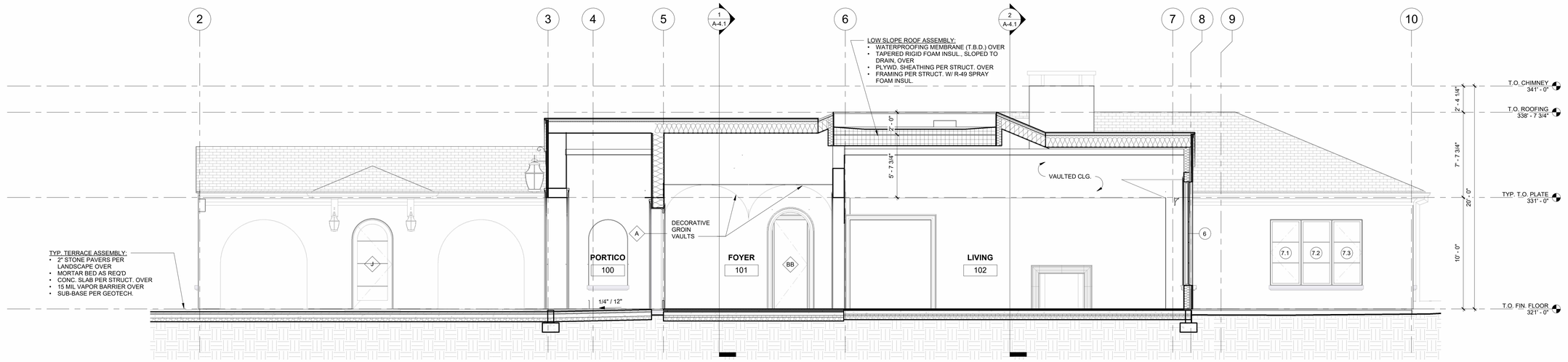

2 BUILDING SECTION @ FOYER & LIVING
1/4" = 1'-0"

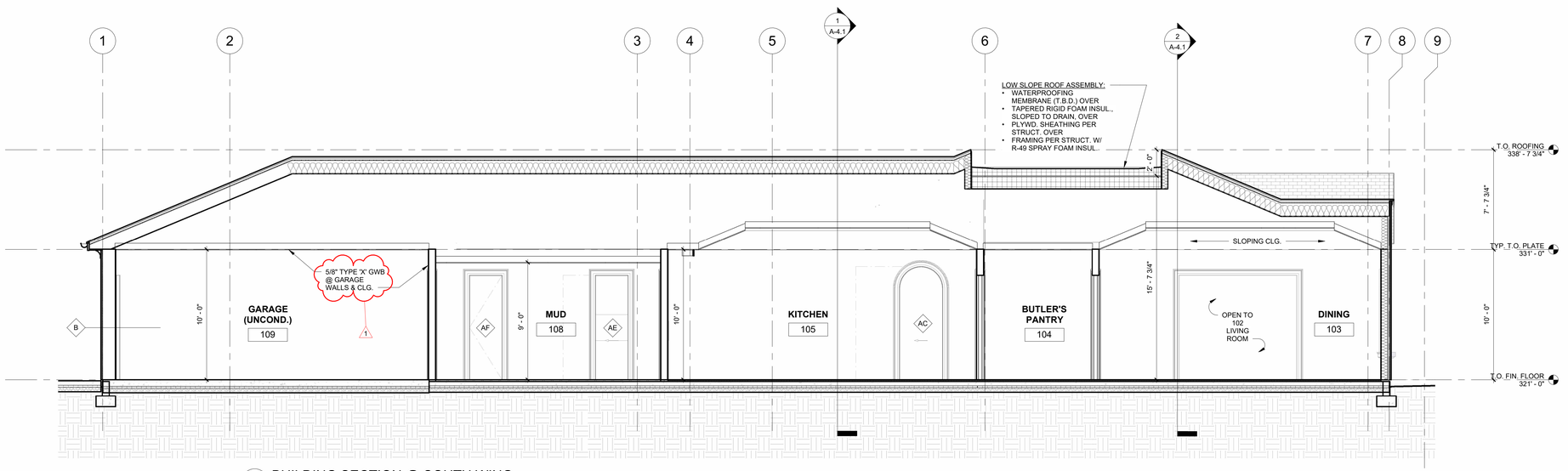

3 BUILDING SECTION @ SOUTH WING
1/4" = 1'-0"

NOTE: REFER TO SHEET A-5.0 FOR FLOOR, ROOF & WALL ASSEMBLIES

All drawings, specifications, plans, ideas, arrangements, and designs represented or referred to are the property of and owned by Stuart Silk Architects whether the project for which they are made is executed or not. They were created, evolved, developed and produced for the sole use on and in connection with this project and none of the above may be disclosed or given to or used by any person, firm, or corporation for any use or purpose whatsoever including any other project, except upon written permission of Stuart Silk Architects.

© COPYRIGHT 2022
STUART SILK ARCHITECTS

3257
REGISTERED ARCHITECT
STUART TAYLOR SILK
STATE OF WASHINGTON

DESIGN	SNS, ESH
DRAWN	ESH
CHECKED	ANC
SHEET ISSUE DATE	03/07/22
DRAWING SETS	
	PRE-APPLICATION 09/23/21
	PERMIT 03/07/22

REVISIONS

#	DATE	DESCRIPTION
1	07/29/22	PERMIT REVISIONS

Stuart Silk Architects

2400 N. 45th Street
Seattle, WA 98103

WWW.STUARTSILK.COM

BRINDLEY RESIDENCE

ADDRESS T.B.D.
78xx - 79TH AVE. SE
MERCER ISLAND, WA 98040

PERMIT NO. 2203-116
PRICING DRAWINGS

BUILDING SECTIONS LONGITUDINAL

A-4.0

PLOT DATE: 7/29/2022 12:03:28 PM

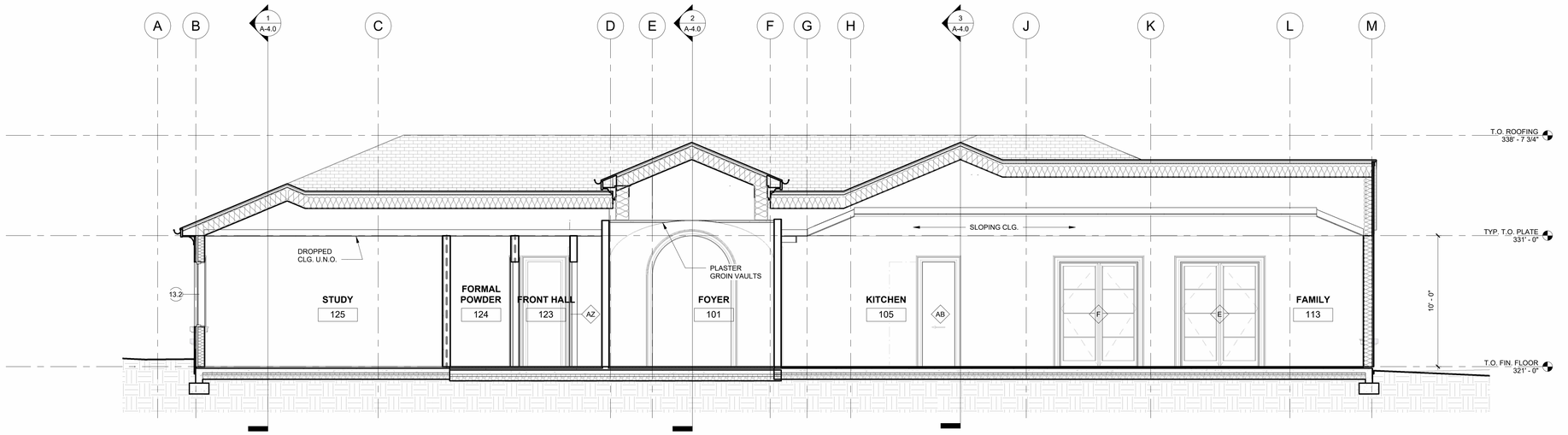

1 BUILDING SECTION @ STUDY, KITCHEN & FAMILY
1/4" = 1'-0"

NOTE: REFER TO SHEET A-5.0 FOR FLOOR, ROOF & WALL ASSEMBLIES

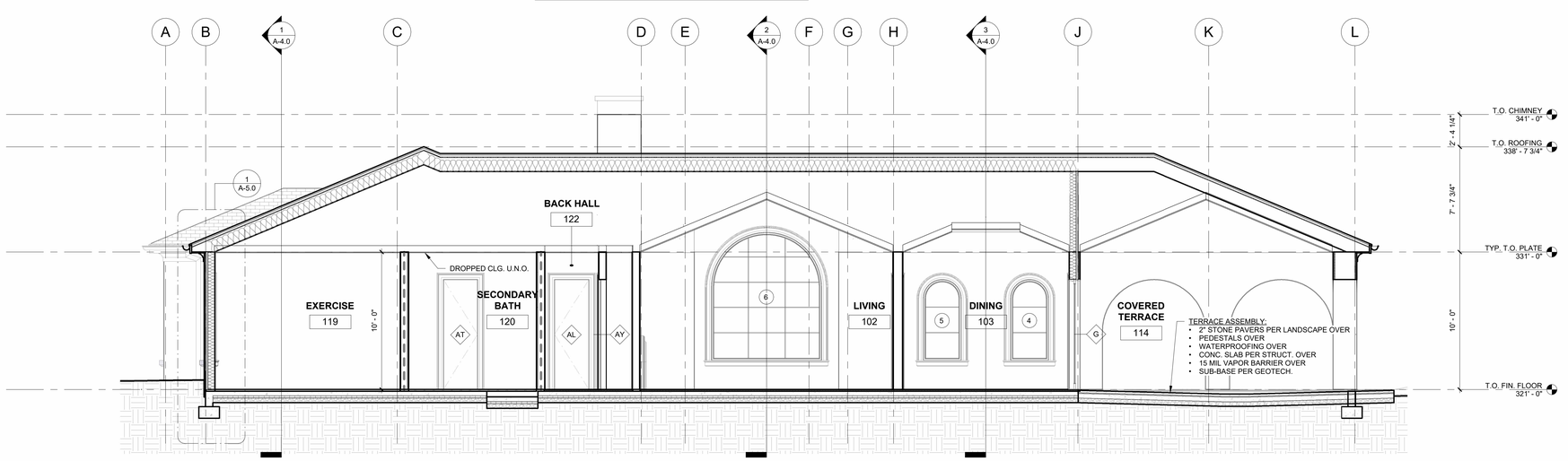

2 BUILDING SECTION @ LIVING, DINING & TERRACE
1/4" = 1'-0"

All drawings, specifications, plans, ideas, arrangements, and designs represented or referred to are the property of and owned by Stuart Silk Architects whether the project for which they are made is executed or not. They were created, evolved, developed and produced for the sole use on and in connection with this project and none of the above may be disclosed or given to or used by any person, firm, or corporation for any use or purpose whatsoever including any other project, except upon written permission of Stuart Silk Architects.

© COPYRIGHT 2022
STUART SILK ARCHITECTS

3257
REGISTERED ARCHITECT
STUART TAYLOR SILK
STATE OF WASHINGTON

DESIGN	SNS, ESH
DRAWN	ESH
CHECKED	ANC
SHEET ISSUE DATE	03/07/22

DRAWING SETS
- PRE-APPLICATION 09/23/21
- PERMIT 03/07/22

REVISIONS

#	DATE	DESCRIPTION

Stuart Silk Architects

2400 N. 45th Street
Seattle, WA 98103

WWW.STUARTSILK.COM

BRINDLEY RESIDENCE

ADDRESS T.B.D.
78xx - 79TH AVE. SE
MERCER ISLAND,
WA 98040

PERMIT NO. 2203-116
PRICING DRAWINGS

BUILDING SECTIONS
TRANSVERSE

A-4.1

PLOT DATE: 7/29/2022 12:03:34 PM

All drawings, specifications, plans, ideas, arrangements, and designs represented or referred to are the property of and owned by Stuart Silk Architects whether the project for which they are made is executed or not. They were created, evolved, developed and produced for the sole use on and in connection with this project and none of the above may be disclosed or given to or used by any person, firm, or corporation for any use or purpose whatsoever including any other project, except upon written permission of Stuart Silk Architects.

© COPYRIGHT 2022
STUART SILK ARCHITECTS

3257
REGISTERED ARCHITECT
STUART TAYLOR SILK
STATE OF WASHINGTON

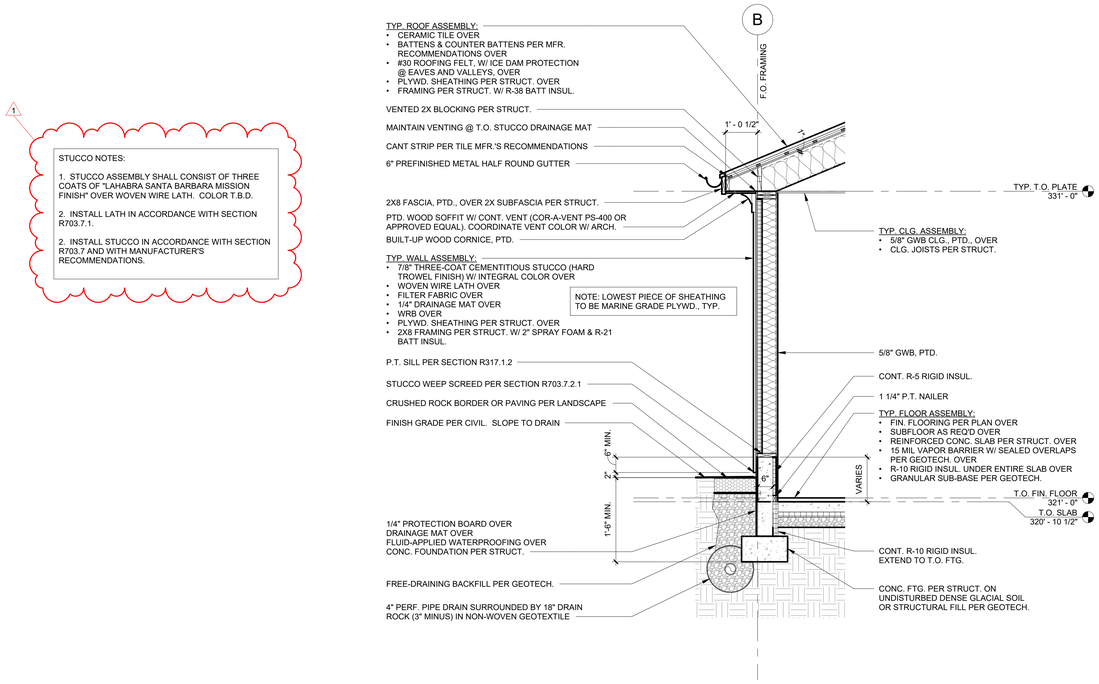

1 TYP. WALL SECTION
1/2" = 1'-0"

1

STUCCO NOTES:

1. STUCCO ASSEMBLY SHALL CONSIST OF THREE COATS OF "LAHABRA SANTA BARBARA MISSION FINISH" OVER WOVEN WIRE LATH. COLOR T.B.D.

2. INSTALL LATH IN ACCORDANCE WITH SECTION R703.7.1.

2. INSTALL STUCCO IN ACCORDANCE WITH SECTION R703.7 AND WITH MANUFACTURER'S RECOMMENDATIONS.

DESIGN	SNS, ESH
DRAWN	ESH
CHECKED	ANC
SHEET ISSUE DATE	03/07/22

DRAWING SETS

PRE-APPLICATION 09/23/21

PERMIT 03/07/22

REVISIONS

#	DATE	DESCRIPTION
1	07/29/22	PERMIT REVISIONS

Stuart Silk Architects

2400 N. 45th Street
Seattle, WA 98103

WWW.STUARTSILK.COM

BRINDLEY RESIDENCE

ADDRESS T.B.D.
78xx - 79TH AVE. SE
MERCER ISLAND,
WA 98040

PERMIT NO. 2203-116
PRICING DRAWINGS

WALL SECTIONS

A-5.0

PLOT DATE: 7/29/2022 12:03:34 PM

WINDOW SCHEDULE ORGANIZATION

1. WINDOWS ARE CALLED OUT WITH A SINGLE NUMBER (EXAMPLE: 1, 2,...11, 12).
2. LABELING BEGINS AT THE WEST ELEVATION AND PROCEEDS COUNTERCLOCKWISE.

WINDOW DIAGRAM NOTES

1. ALL DIAGRAMS ARE SHOWN FROM THE EXTERIOR SIDE.
2. PROVIDE EXTERIOR TRIM AND MULL COVERS AS SHOWN ON THE DIAGRAM.
3. SEE WINDOW SECTIONS FOR CRITICAL WINDOW INFORMATION.
4. SHOP DRAWING APPROVAL BY ARCHITECT REQUIRED PRIOR TO FABRICATION.
5. CONTRACTOR TO CONFIRM ALL REQUIRED ROUGH OPENING SIZES WITH MANUFACTURER PRIOR TO FRAMING.
6. MANUFACTURER TO REVIEW INSTALLATION LOCATIONS AND DETERMINE WHICH LITES ARE REQUIRED TO BE SAFETY GLAZING.
7. MANUFACTURER TO REVIEW INSTALLATION LOCATIONS AND SIZES TO DETERMINE IF OPERABLE WINDOWS MEET EGRESS REQUIREMENTS.
8. ALL SAFETY GLAZING PER IRC R308.4
9. ALL WINDOWS TO BE NFRC CERTIFIED

GLAZING NOTES

1. ALIGN HORIZONTAL MUNTINS, TYP. U.N.O.
2. TALL WINDOW UNITS ARE ANTICIPATED TO REQUIRE INCREASED THICKNESS OF GLASS. PROVIDE SAMPLES OF GLAZING FOR REVIEW BY ARCH. AND OWNER PRIOR TO ORDERING WINDOWS AND EXTERIOR DOORS.

WINDOW SCHEDULE

MARK	ROOM #	ROOM NAME	DESCRIPTION	DIAGRAM	WIDTH	HEIGHT	SILL HEIGHT	HEAD DTL.	JAMB DTL.	SILL DTL.	U VALUE	COMMENTS
1.1	113	FAMILY	CASEMENT	5 (LEFT SASH)	33"	70 3/4"	25 1/4"				0.28	
1.2	113	FAMILY	CASEMENT	5 (LEFT SASH)	33"	70 3/4"	25 1/4"				0.28	
2	113	FAMILY	EXTENDED 1/2 ROUND, FIXED	3	33"	70 3/4"	25 1/4"				0.28	
3	113	FAMILY	EXTENDED 1/2 ROUND, FIXED	3	33"	70 3/4"	25 1/4"				0.28	
4	103	DINING	EXTENDED 1/2 ROUND, FIXED	3	33"	70 3/4"	25 1/4"				0.28	
5	103	DINING	EXTENDED 1/2 ROUND, FIXED	3	33"	70 3/4"	25 1/4"				0.28	
6	102	LIVING	EXTENDED 1/2 ROUND, FIXED	1	96"	111 3/4"	25 1/4"				0.28	
7.1	116	PRIMARY BED	CASEMENT	7 (LEFT SASH)	33"	70 3/4"	25 1/4"				0.28	EGRESS WINDOW
7.2	116	PRIMARY BED	FIXED	7 (MIDDLE SASH)	33"	70 3/4"	25 1/4"				0.28	
7.3	116	PRIMARY BED	CASEMENT	7 (RIGHT SASH)	33"	70 3/4"	25 1/4"				0.28	
8.1	116	PRIMARY BED	CASEMENT	5 (LEFT SASH)	33"	70 3/4"	25 1/4"				0.28	
8.2	116	PRIMARY BED	CASEMENT	5 (RIGHT SASH)	33"	70 3/4"	25 1/4"				0.28	
9.1	117	PRIMARY BATH	CASEMENT	5 (LEFT SASH)	33"	70 3/4"	25 1/4"				0.28	SAFETY GLAZING
9.2	117	PRIMARY BATH	CASEMENT	5 (RIGHT SASH)	33"	70 3/4"	25 1/4"				0.28	SAFETY GLAZING
10	117	PRIMARY BATH	CASEMENT	4	33"	70 3/4"	25 1/4"				0.28	
11.1	119	EXERCISE	CASEMENT	5 (LEFT SASH)	33"	70 3/4"	25 1/4"				0.28	
11.2	119	EXERCISE	CASEMENT	5 (RIGHT SASH)	33"	70 3/4"	25 1/4"				0.28	
12.1	121	SECONDARY BED	CASEMENT	5 (LEFT SASH)	33"	70 3/4"	25 1/4"				0.28	
12.2	121	SECONDARY BED	CASEMENT	5 (RIGHT SASH)	33"	70 3/4"	25 1/4"				0.28	EGRESS WINDOW
13.1	125	STUDY	CASEMENT	6 (LEFT SASH)	30"	59 1/2"	36 1/2"				0.28	
13.2	125	STUDY	CASEMENT	6 (RIGHT SASH)	30"	59 1/2"	36 1/2"				0.28	
14.1	129	GUEST BED	CASEMENT	5 (LEFT SASH)	33"	70 3/4"	25 1/4"				0.28	
14.2	129	GUEST BED	CASEMENT	5 (RIGHT SASH)	33"	70 3/4"	25 1/4"				0.28	EGRESS WINDOW
15	129	GUEST BED	EXTENDED 1/2 ROUND, FIXED	2	66"	96"	25 1/4"				0.28	
16	125	STUDY	EXTENDED 1/2 ROUND, FIXED	3	33"	70 3/4"	25 1/4"				0.28	
17	123	FRONT HALL	EXTENDED 1/2 ROUND, FIXED	3	33"	70 3/4"	25 1/4"				0.28	

1

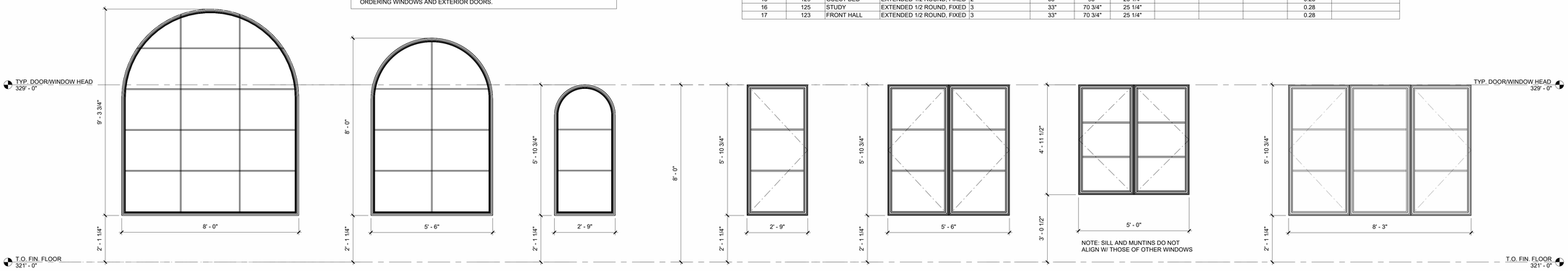

1 FIXED HALF ROUND 1/2" = 1'-0"
2 FIXED HALF ROUND 1/2" = 1'-0"
3 FIXED HALF ROUND 1/2" = 1'-0"
4 SINGLE CASEMENT 1/2" = 1'-0"
5 DOUBLE CASEMENT 1/2" = 1'-0"
6 DOUBLE CASEMENT 1/2" = 1'-0"
7 TRIPLE CASEMENT (CENTER FIXED) 1/2" = 1'-0"

DOOR DIAGRAM NOTES

1. ALL DIAGRAMS ARE SHOWN FROM THE EXTERIOR SIDE.
2. SEE DOOR SECTIONS FOR CRITICAL DOOR INFORMATION.
3. SHOP DRAWING APPROVAL BY ARCHITECT REQUIRED PRIOR TO FABRICATION.
4. CONTRACTOR TO CONFIRM ALL REQUIRED ROUGH OPENING SIZES WITH MANUFACTURER PRIOR TO FRAMING.
5. MANUFACTURER TO REVIEW INSTALLATION LOCATIONS AND DETERMINE WHICH LITES ARE REQUIRED TO BE SAFETY GLAZING.
6. MANUFACTURER TO REVIEW INSTALLATION LOCATIONS AND SIZES TO DETERMINE IF OPERABLE DOORS MEET EGRESS REQUIREMENTS.
7. ALL EXTERIOR DOORS TO BE NFRC CERTIFIED

DOOR SCHEDULE - EXTERIOR

MARK	ROOM #	ROOM NAME	DESCRIPTION	DIAGRAM	WIDTH	HEIGHT	HEAD DTL.	SILL DTL.	JAMB DTL.	U VALUE	COMMENTS
A	101	FOYER	SINGLE INSWING		48"	108"				0.28	CUSTOM ARCHED METAL DOOR W/ SAFETY GLAZING
B	109	GARAGE (UNCOND.)	OVERHEAD		120"	96"					W/ OPENER
C	109	GARAGE (UNCOND.)	OVERHEAD		120"	96"					W/ OPENER
D	112	OUTDOOR STORAGE (UNCOND.)	SINGLE OUTSWING		36"	96"					
E	113	FAMILY	DOUBLE OUTSWING		72"	96"				0.28	SAFETY GLAZING
F	113	FAMILY	DOUBLE OUTSWING		72"	96"				0.28	SAFETY GLAZING
G	103	DINING	DOUBLE OUTSWING		72"	96"				0.28	SAFETY GLAZING
H	103	DINING	DOUBLE OUTSWING		72"	96"				0.28	SAFETY GLAZING
J	129	GUEST BED	SINGLE INSWING		42"	96"				0.28	SAFETY GLAZING

DOOR SCHEDULE - INTERIOR

MARK	ROOM #	ROOM NAME	DESCRIPTION	DIAGRAM	WIDTH	HEIGHT	HEAD DTL.	SILL DTL.	JAMB DTL.	COMMENTS
AA	103	DINING	SINGLE POCKET		30"	96"				
AB	104	BUTLER'S PANTRY	SINGLE POCKET		30"	96"				
AC	105	KITCHEN	SINGLE POCKET		40"	104"				ARCHED HEAD
AD	108	MUD	SINGLE POCKET		36"	96"				
AE	106	PANTRY	SINGLE POCKET		30"	96"				
AF	108	MUD	SINGLE HINGED		30"	96"				W/ DECORATIVE GLASS LIGHT
AG	109	GARAGE (UNCOND.)	SINGLE HINGED		36"	96"				20-MIN. DOOR W/ SELF CLOSER
AH	110	LAUNDRY	SINGLE HINGED		30"	96"				
AJ	108	MUD	DOUBLE HINGED		60"	96"				
AK	111	INFORMAL POWDER	SINGLE HINGED		30"	96"				
AL	115	VESTIBULE	SINGLE HINGED		30"	96"				
AM	117	PRIMARY BATH	SINGLE HINGED		30"	96"				
AN	117	PRIMARY BATH	SINGLE HINGED		30"	96"				
AP	118	PRIMARY CLOS.	SINGLE POCKET		30"	96"				
AQ	118	PRIMARY CLOS.	SINGLE POCKET		30"	96"				
AR	119	EXERCISE	SINGLE HINGED		30"	96"				
AS	119	EXERCISE	DOUBLE HINGED		60"	96"				
AT	120	SECONDARY BATH	SINGLE HINGED		30"	96"				
AU	120	SECONDARY BATH	SINGLE HINGED		30"	96"				
AV	120	SECONDARY BATH	SINGLE HINGED		30"	96"				
AW	121	SECONDARY BED	DOUBLE HINGED		60"	96"				
AX	121	SECONDARY BED	SINGLE HINGED		30"	96"				
AY	122	BACK HALL	DOUBLE HINGED		60"	96"				
AZ	123	FRONT HALL	DOUBLE HINGED		72"	96"				
BA	124	FORMAL POWDER	SINGLE HINGED		30"	96"				
BB	125	STUDY	SINGLE HINGED		36"	96"				
BC	126	STORAGE	SINGLE HINGED		36"	96"				
BD	127	MECHANICAL	SINGLE HINGED		36"	96"				PROVIDE SOUND GASKETING
BE	128	GUEST BATH	SINGLE HINGED		30"	96"				

All drawings, specifications, plans, ideas, arrangements, and designs represented or referred to are the property of and owned by Stuart Silk Architects whether the project for which they are made is executed or not. They were created, evolved, developed and produced for the sole use on and in connection with this project and none of the above may be disclosed or given to or used by any person, firm, or corporation for any use or purpose whatsoever including any other project, except upon written permission of Stuart Silk Architects.

© COPYRIGHT 2022
STUART SILK ARCHITECTS

3257 REGISTERED ARCHITECT
STUART NAYLOR SILK
STATE OF WASHINGTON

DESIGN	SNS, ESH
DRAWN	ESH
CHECKED	ANC
SHEET ISSUE DATE	03/07/22
DRAWING SETS	
	PRE-APPLICATION 09/23/21
	PERMIT 03/07/22

REVISIONS

#	DATE	DESCRIPTION
1	07/29/22	PERMIT REVISIONS

Stuart Silk Architects

2400 N. 45th Street
Seattle, WA 98103

WWW.STUARTSILK.COM

BRINDLEY RESIDENCE

ADDRESS T.B.D.
78xx - 79TH AVE. SE
MERCER ISLAND, WA 98040

PERMIT NO. 2203-116
PRICING DRAWINGS

DOOR & WINDOW SCHEDULES

A-6.0

PLOT DATE: 7/29/2022 12:03:42 PM

All drawings, specifications, plans, ideas, arrangements, and designs represented or referred to are the property of and owned by Stuart Silk Architects whether the project for which they are made is executed or not. They were created, evolved, developed and produced for the sole use on and in connection with this project and none of the above may be disclosed or given to or used by any person, firm, or corporation for any use or purpose whatsoever including any other project, except upon written permission of Stuart Silk Architects.

© COPYRIGHT 2022
STUART SILK ARCHITECTS

MASONRY FIREPLACE NOTES

1. FIREPLACE TO BE UL LISTED, LABELED, AND INSTALLED PER LISTING AND MANUFACTURER'S RECOMMENDATIONS.
2. MAINTAIN 2" CLEAR TO COMBUSTIBLES THROUGHOUT.
3. NON-COMBUSTIBLE OUTER HEARTH TO EXTEND 20" MIN. IN FRONT OF FIREPLACE OPENING.
4. NON-COMBUSTIBLE OUTER HEARTH TO EXTEND 12" MIN. BEYOND EACH SIDE OF FIREPLACE OPENING. SEE DRAWINGS FOR CRITICAL ALIGNMENTS.
5. NO COMBUSTIBLE MATERIAL SHALL BE PLACED WITHIN 8" OF FIREPLACE OPENING. NO COMBUSTIBLE MATERIAL WITHIN 12" OF FIREPLACE OPENING SHALL PROJECT MORE THAN 1/8" FOR EACH 1" OF CLEARANCE FROM THE OPENING.
6. TEST BURN FIREPLACE FOR 2 HOURS.
7. PROVIDE 10 SQUARE INCHES OF EXTERIOR COMBUSTION AIR TO FIREBOX.
8. SUB GAS LINE TO FIREBOX. FIELD LOCATE SHUTOFF VALVE WITH ARCH. & OWNER.
9. SEE STRUCT. DRAWINGS FOR ADDITIONAL REQUIREMENTS.
10. MASON SHALL REVIEW FIREPLACE LAYOUT DIMENSIONS AND CONSTRUCTION AND SHALL PROVIDE RECOMMENDATIONS TO ACHIEVE OPTIMAL PERFORMANCE.

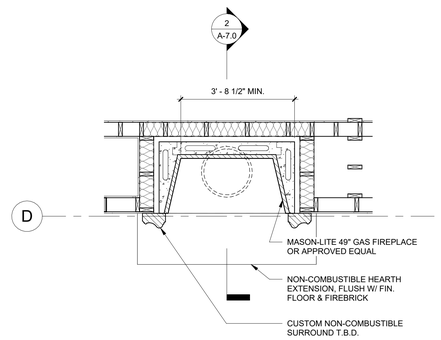

1 FIREPLACE PLAN - LIVING 102
1/2" = 1'-0"

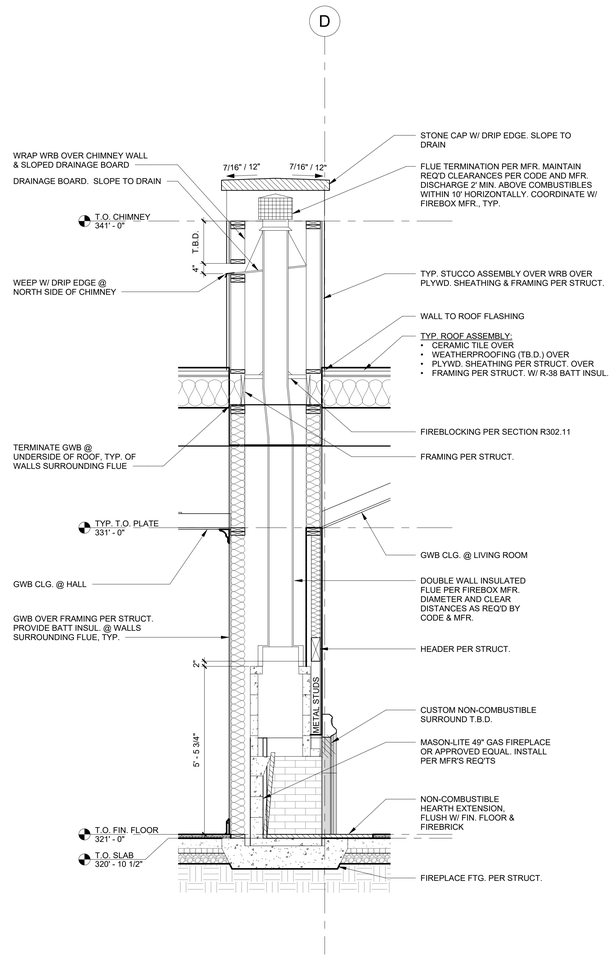

2 FIREPLACE SECTION
1/2" = 1'-0"

3257
REGISTERED ARCHITECT
STUART TAYLOR SILK
STATE OF WASHINGTON

DESIGN	SNS, ESH
DRAWN	ESH
CHECKED	ANC
SHEET ISSUE DATE	03/07/22
DRAWING SETS	
	PRE-APPLICATION 09/23/21
	PERMIT 03/07/22

REVISIONS

#	DATE	DESCRIPTION

Stuart Silk Architects

2400 N. 45th Street
Seattle, WA 98103

WWW.STUARTSILK.COM

BRINDLEY RESIDENCE

ADDRESS T.B.D.
78xx - 79TH AVE. SE
MERCER ISLAND, WA 98040

PERMIT NO. 2203-116
PRICING DRAWINGS

DETAILS

A-7.0

PLOT DATE: 7/29/2022 12:03:43 PM

GENERAL STRUCTURAL NOTES

(The following apply unless shown otherwise on the plans)

CRITERIA

1. ALL MATERIALS, WORKMANSHIP, DESIGN, AND CONSTRUCTION SHALL CONFORM TO THE DRAWINGS, SPECIFICATIONS, THE 2018 EDITION OF THE INTERNATIONAL BUILDING CODE (IBC.

2. DESIGN LOADING CRITERIA

ROOF SNOW LOAD AT SLOPED ROOF	25 PSF
ROOF SNOW LOAD AT FLAT ROOF	30 PSF
ROOF DEAD LOAD ALLOWANCE FOR PV PANELS (IN DESIGNATED AREAS)	4 PSF

WIND : ANALYSIS PROCEDURE: ASCE 7-16 CHAPTER 27 "PART 1 - BUILDINGS OF ALL HEIGHTS"
RISK CATEGORY II
98 MPH
EXPOSURE 'C'
TOPOGRAPHIC FACTOR Kzt = 1.9
WIND BASE SHEAR, NORTH/SOUTH Vn = 47.1 K
WIND BASE SHEAR, EAST/WEST Vn = 37.3 K

CLADDING / WINDOW DESIGN PRESSURE (MAX.) 35 PSF

THE DESIGN WIND PRESSURES LISTED ABOVE ARE INWARD OR OUTWARD AND ARE BASED ON AN EFFECTIVE WIND AREA OF 10 SQUARE FEET NEAR A BUILDING CORNER, U.O.N. CORNER AND OTHER ZONES ARE DEFINED BY FIGURE 30.3-1, 30.3-2A TO 2I AND 30.3-5A TO 5B IN ASCE 7-16. REDUCED DESIGN PRESSURES MAY BE CALCULATED USING ASCE 7. NOTE THAT THE DESIGN WIND PRESSURES NOTED ABOVE ARE ULTIMATE VALUES PER THE 2018 IBC AND SHALL BE MULTIPLIED BY 0.6 FOR ALLOWABLE STRESS DESIGN.

EARTHQUAKE : ANALYSIS PROCEDURE: IBC "EQUIVALENT LATERAL FORCE PROCEDURE"
SEISMIC DESIGN CATEGORY (SDC) = D
RISK CATEGORY = II
SEISMIC SITE CLASS = D
IMPORTANCE FACTOR Ie = 1.0
MAPPED MCE Ss = 1.41; S1 = 0.51
DESIGN ACCELERATION Sds = 1.18; Sd1 = 0.61
SEISMIC RESISTING SYSTEM: WOOD PANEL BEARING SHEAR WALL, R = 6.5
SEISMIC BASE SHEAR Vs = 46.3 K

SEE PLANS FOR ADDITIONAL LOADING CRITERIA.

3. LATERAL LOADS ARE TRANSFERRED BY THE ROOF AND FLOOR DIAPHRAGMS TO THE SHEAR WALLS. FORCES ARE BASED ON THE TRIBUTARY AREA FOR EACH SHEAR WALL AND ARE CARRIED BY THE SHEAR WALLS TO THE FOUNDATION.

4. STRUCTURAL DRAWINGS SHALL BE USED IN CONJUNCTION WITH ARCHITECTURAL DRAWINGS FOR BIDDING AND CONSTRUCTION. CONTRACTOR SHALL VERIFY DIMENSIONS AND CONDITIONS FOR COMPATIBILITY AND SHALL NOTIFY ARCHITECT OF ANY DISCREPANCIES PRIOR TO CONSTRUCTION.

5. CONTRACTOR SHALL VERIFY ALL EXISTING DIMENSIONS, MEMBER SIZES, AND CONDITIONS PRIOR TO COMMENCING ANY WORK. ALL DIMENSIONS OF EXISTING CONSTRUCTION SHOWN ON THE DRAWINGS ARE INTENDED AS GUIDELINES ONLY AND MUST BE VERIFIED.

6. CONTRACTOR SHALL PROVIDE TEMPORARY BRACING FOR THE STRUCTURE AND STRUCTURAL COMPONENTS UNTIL ALL FINAL CONNECTIONS HAVE BEEN COMPLETED IN ACCORDANCE WITH THE PLANS.

7. CONTRACTOR SHALL BE RESPONSIBLE FOR ALL SAFETY PRECAUTIONS AND THE METHODS, TECHNIQUES, SEQUENCES OR PROCEDURES REQUIRED TO PERFORM THEIR WORK. THE STRUCTURAL ENGINEER HAS NO OVERALL SUPERVISORY AUTHORITY OR ACTUAL AND/OR DIRECT RESPONSIBILITY FOR THE SPECIFIC WORKING CONDITIONS AT THE SITE AND/OR FOR ANY HAZARDS RESULTING FROM THE ACTIONS OF ANY TRADE CONTRACTOR. THE STRUCTURAL ENGINEER HAS NO DUTY TO INSPECT, SUPERVISE, NOTE, CORRECT, OR REPORT ANY HEALTH OR SAFETY DEFICIENCIES OF THE OWNER, CONTRACTORS, OR OTHER ENTITIES OR PERSONS AT THE PROJECT SITE.

8. CONTRACTOR-INITIATED CHANGES SHALL BE SUBMITTED IN WRITING TO THE ARCHITECT AND STRUCTURAL ENGINEER FOR APPROVAL PRIOR TO FABRICATION OR CONSTRUCTION. CHANGES SHOWN ON SHOP DRAWINGS ONLY WILL NOT SATISFY THIS REQUIREMENT.

9. DRAWINGS INDICATE GENERAL AND TYPICAL DETAILS OF CONSTRUCTION. WHERE CONDITIONS ARE NOT SPECIFICALLY INDICATED BUT ARE OF SIMILAR CHARACTER TO DETAILS SHOWN, SIMILAR DETAILS OF CONSTRUCTION SHALL BE USED, SUBJECT TO REVIEW AND APPROVAL BY THE ARCHITECT AND THE STRUCTURAL ENGINEER. WHERE INFORMATION ON THE DRAWINGS IS IN CONFLICT WITH THE SPECIFICATIONS, THE MORE STRINGENT SHALL APPLY, SUBJECT TO REVIEW AND APPROVAL BY THE ARCHITECT AND THE STRUCTURAL ENGINEER. DO NOT SCALE THE DRAWINGS.

10. ALL STRUCTURAL SYSTEMS WHICH ARE COMPOSED OF FIELD ERECTED COMPONENTS SHALL BE SUPERVISED BY THE SUPPLIER DURING MANUFACTURING, DELIVERY, HANDLING, STORAGE AND ERECTION IN ACCORDANCE WITH INSTRUCTIONS PREPARED BY THE SUPPLIER.

11. SHOP DRAWINGS GLUED LAMINATED MEMBERS, CONNECTOR PLATE WOOD ROOF TRUSSES, AND PLYWOOD WEB JOISTS SHALL BE SUBMITTED TO THE ARCHITECT AND STRUCTURAL ENGINEER FOR REVIEW PRIOR TO FABRICATION OF THESE ITEMS.

12. SHOP DRAWING REVIEW: DIMENSIONS AND QUANTITIES ARE NOT REVIEWED BY THE ENGINEER OF RECORD AND THEREFORE MUST BE VERIFIED BY THE CONTRACTOR. CONTRACTOR SHALL REVIEW AND STAMP DRAWINGS PRIOR TO REVIEW BY ENGINEER OF RECORD. CONTRACTOR SHALL REVIEW DRAWINGS FOR CONFORMANCE WITH THE MEANS, METHODS, TECHNIQUES, SEQUENCES AND OPERATIONS OF CONSTRUCTION, AND ALL SAFETY PRECAUTIONS AND PROGRAMS INCIDENTAL THERETO. A MINIMUM OF TWO WEEKS SHALL BE ALLOWED FOR REVIEW.

13. SHOP DRAWING SUBMITTALS PROCESSED BY THE ENGINEER ARE NOT CHANGE ORDERS. THE PURPOSE OF SHOP DRAWING SUBMITTALS BY THE CONTRACTOR IS TO DEMONSTRATE TO THE ENGINEER THAT THE CONTRACTOR UNDERSTANDS THE DESIGN CONCEPT, BY INDICATING WHICH MATERIAL IS INTENDED TO BE FURNISHED AND INSTALLED AND BY DETAILING THE INTENDED FABRICATION AND INSTALLATION METHODS. IF DEVIATIONS, DISCREPANCIES, OR CONFLICTS BETWEEN SHOP DRAWING SUBMITTALS AND THE CONTRACT DOCUMENTS ARE DISCOVERED EITHER PRIOR TO OR AFTER SHOP DRAWING SUBMITTALS ARE PROCESSED BY THE ENGINEER, THE DESIGN DRAWINGS AND SPECIFICATIONS SHALL CONTROL AND SHALL BE FOLLOWED.

14. SPECIAL INSPECTION: EXPANSION BOLTS AND THREADED EXPANSION INSERTS, SCREW ANCHORS, AND EPOXY GROUTED INSTALLATIONS SHALL BE SUPERVISED IN ACCORDANCE WITH IBC SECTIONS 1704 & 1705 AND THE PROJECT SPECIFICATIONS BY A QUALIFIED TESTING AGENCY DESIGNATED BY THE OWNER. THE TESTING AGENCY SHALL SEND COPIES OF ALL STRUCTURAL TESTING AND INSPECTION REPORTS DIRECTLY TO THE OWNER, ARCHITECT, STRUCTURAL ENGINEER, CONTRACTOR AND BUILDING OFFICIAL. ANY MATERIALS WHICH FAIL TO MEET PROJECT SPECIFICATIONS SHALL BE BROUGHT TO THE ATTENTION OF THE ARCHITECT.

GEOTECHNICAL

15. FOUNDATION NOTES: SUBGRADE PREPARATION INCLUDING DRAINAGE, EXCAVATION, COMPACTION, AND FILLING REQUIREMENTS SHALL CONFORM STRICTLY WITH RECOMMENDATIONS GIVEN IN THE GEOTECHNICAL REPORT OR AS DIRECTED BY THE GEOTECHNICAL ENGINEER. FOOTINGS SHALL BEAR ON SOLID UNDISTURBED EARTH (CONTROLLED, COMPACTED STRUCTURAL FILL OR BOTH) AT LEAST 18" BELOW LOWEST ADJACENT FINISHED GRADE. FOOTING DEPTHS/ELEVATIONS SHOWN ON PLANS (OR IN DETAILS) ARE MINIMUM AND FOR GUIDANCE ONLY; THE ACTUAL ELEVATIONS OF FOOTINGS MUST BE ESTABLISHED BY THE CONTRACTOR IN THE FIELD WORKING WITH THE TESTING LAB AND GEOTECHNICAL ENGINEER. UNLESS OTHERWISE NOTED, FOOTINGS SHALL BE CENTERED UNDER COLUMNS OR WALLS ABOVE.

BACKFILL BEHIND ALL RETAINING WALLS WITH FREE DRAINING GRANULAR FILL AND PROVIDE FOR SUBSURFACE DRAINAGE AS NOTED IN THE GEOTECHNICAL REPORT.

THE STRUCTURAL DESIGN IS BASED ON THE FOLLOWING VALUES FROM THE REFERENCED GEOTECHNICAL REPORT:

ALLOWABLE SOIL BEARING PRESSURE	2,500 PSF
PASSIVE SOIL PRESSURE	300 PCF
SOIL COEFFICIENT OF FRICTION	0.5
SOIL DENSITY	135 PCF

GEOTECHNICAL REPORT REFERENCE: #JN 21326 BY GEOTECH CONSULTANTS, INC. DATED SEPTEMBER 2, 2021.

CONCRETE

16. CONCRETE SHALL BE MIXED, PROPORTIONED, CONVEYED AND PLACED IN ACCORDANCE WITH ACI 301. CONSTRUCTION TOLERANCES SHALL NOT EXCEED THOSE LISTED IN ACI 117. CONCRETE SHALL ATTAIN A 28-DAY STRENGTH OF f'c = 2,500 PSI AND MIX SHALL CONTAIN NOT LESS THAN 5-1/2 SACKS OF CEMENT PER CUBIC YARD AND SHALL BE PROPORTIONED TO PRODUCE A SLUMP OF 5" OR LESS (BEFORE THE ADDITION OF ADMIXTURES). THE WATER/CEMENT RATIO SHALL NOT EXCEED 0.55 FOR FOOTINGS AND 0.45 FOR ALL SLABS AND EXPOSED CONCRETE UNLESS OTHERWISE NOTED. EXCEPT FOR FOOTINGS AND SLAB ON GRADE, AGGREGATE SIZE SHALL NOT EXCEED 3/4".

THE MINIMUM AMOUNT OF CEMENT AND THE MAXIMUM SLUMP MAY BE CHANGED IF A CONCRETE PERFORMANCE MIX IS SUBMITTED TO THE STRUCTURAL ENGINEER AND THE BUILDING DEPARTMENT OF MERCER ISLAND FOR APPROVAL TWO WEEKS PRIOR TO PLACING ANY CONCRETE. (THE W/C RATIO LIMITS STILL APPLY). THE PERFORMANCE MIX SHALL INCLUDE THE AMOUNTS OF CEMENT, CEMENTITIOUS MATERIAL, FINE AND COARSE AGGREGATE, WATER AND ADMIXTURES AS WELL AS THE WATER CEMENT RATIO, SLUMP, CONCRETE YIELD AND SUBSTANTIATING STRENGTH DATA IN ACCORDANCE WITH ACI 301. CHEMICAL ADMIXTURES AND FLY ASH SHALL CONFORM TO ASTM C494 AND C618 RESPECTIVELY. FLY ASH PERCENTAGE OF TOTAL CEMENTITIOUS MATERIAL SHALL NOT EXCEED 20%. THE USE OF A PERFORMANCE MIX REQUIRES BATCH PLANT INSPECTION, THE COST OF WHICH SHALL BE BROUGHT TO THE ATTENTION OF THE OWNER. REVIEW OF MIX SUBMITTALS BY THE ENGINEER OF RECORD INDICATES ONLY THAT INFORMATION PRESENTED CONFORMS GENERALLY TO CONTRACT DOCUMENTS. CONTRACTOR MAINTAINS FULL RESPONSIBILITY FOR SPECIFIED PERFORMANCE.

ALL CONCRETE WITH SURFACES EXPOSED TO STANDING WATER SHALL BE AIR-ENTRAINED WITH AN AIR-ENTRAINING AGENT CONFORMING TO ASTM C260. TOTAL AIR CONTENT FOR FROST-RESISTANT CONCRETE SHALL BE IN ACCORDANCE WITH ACI 318-14 TABLE 19.3.3.1. ALL CONCRETE EXPOSED TO THE WEATHER AND ALL GARAGE SLABS-ON-GRADE SHALL OBTAIN A 28-DAY STRENGTH f'c OF 3,000 PSI IN ACCORDANCE WITH ACI 318 TABLE 19.3.2.1 AND IBC SECTION 1904.1. THIS INCREASE IN REQUIRED STRENGTH IS FOR DURABILITY ONLY (SPECIAL INSPECTION IS NOT REQUIRED). ALL CONCRETE TO RECEIVE A STEEL TROWELED FINISH SHALL NOT BE AIR-ENTRAINED.

17. REINFORCING STEEL (FOR RESIDENTIAL) SHALL CONSIST OF #4 BARS CONFORMING TO ASTM A615, GRADE 40, fy = 40,000 PSI AND SHALL BE DETAILED (INCLUDING HOOKS AND BENDS) IN ACCORDANCE WITH ACI 315 AND 318. LAP ALL CONTINUOUS REINFORCEMENT 48 BAR DIAMETERS, 2'-0" MINIMUM. PROVIDE CORNER BARS AT ALL WALL AND FOOTING INTERSECTIONS, LAP 2'-0" MINIMUM. PROVIDE (2) #4 MIN. U.N.O. TRIM BARS AROUND ALL OPENINGS IN CONCRETE WALLS OR SLABS EXTENDING 2'-0" PAST CORNERS, TYPICAL.

NO BARS PARTIALLY EMBEDDED IN HARDENED CONCRETE SHALL BE FIELD BENT UNLESS SPECIFICALLY SO DETAILED OR APPROVED BY THE STRUCTURAL ENGINEER. NO REINFORCING BARS SHALL BE "WET-SET" INTO THE CONCRETE. PROVIDE A 20' LONG REBAR GROUND (UFER GROUND) PER ELECTRICIAN.

18. CONCRETE PROTECTION (COVER) FOR REINFORCING STEEL SHALL BE AS FOLLOWS:

FOOTINGS AND OTHER UNFORMED SURFACES CAST AGAINST EARTH	3"
FORMED SURFACES EXPOSED TO EARTH (i.e. WALLS BELOW GROUND) OR WEATHER	2"
SLABS AND WALLS (INTERIOR FACE)	1"

CONCRETE WALL REINFORCING - PROVIDE THE FOLLOWING UNLESS DETAILED OTHERWISE:

WALL THICKNESS	VERTICAL BARS	HORIZONTAL BARS
8" WALLS	#4 @ 16" (1 CURTAIN)	#4 @ 10" (1 CURTAIN)

ANCHORAGE

19. EXPANSION BOLTS INTO CONCRETE SHALL BE "STRONG-BOLT 2 WEDGE ANCHOR", AS MANUFACTURED BY SIMPSON STRONG-TIE ANCHOR SYSTEMS. INSTALL IN STRICT ACCORDANCE WITH I.C.C. REPORT NO. ESR-3037 INCLUDING STANDARD EMBEDMENT REQUIREMENTS U.O.N. PROPOSED SUBSTITUTIONS SHALL BE SUBMITTED FOR REVIEW WITH I.C.C. OR IAPMO UES REPORTS INDICATING EQUIVALENT OR GREATER LOAD CAPACITIES. SPECIAL INSPECTION IS REQUIRED FOR ALL EXPANSION BOLT INSTALLATION.

20. SCREW ANCHORS INTO CONCRETE SHALL BE "TITEN HD", AS MANUFACTURED BY SIMPSON STRONG-TIE ANCHOR SYSTEMS. INSTALL IN STRICT ACCORDANCE WITH I.C.C. REPORT NO. ESR-2713 INCLUDING STANDARD EMBEDMENT REQUIREMENTS U.O.N. PROPOSED SUBSTITUTIONS SHALL BE SUBMITTED FOR REVIEW WITH I.C.C. OR IAPMO UES REPORTS INDICATING EQUIVALENT OR GREATER LOAD CAPACITIES. SPECIAL INSPECTION IS REQUIRED FOR ALL SCREW ANCHOR INSTALLATION.

21. SCREW ANCHORS INTO CONCRETE SHALL BE "SCREW-BOLT+", AS MANUFACTURED BY DEWALT. INSTALL IN STRICT ACCORDANCE WITH I.C.C. REPORT NO. ESR-3889 INCLUDING STANDARD EMBEDMENT REQUIREMENTS U.O.N. PROPOSED SUBSTITUTIONS SHALL BE SUBMITTED FOR REVIEW WITH I.C.C. OR IAPMO UES REPORTS INDICATING EQUIVALENT OR GREATER LOAD CAPACITIES. SPECIAL INSPECTION IS REQUIRED FOR ALL SCREW ANCHOR INSTALLATION.

22. EPOXY-GROUTED ITEMS (THREADED RODS OR REINFORCING BAR) INTO CONCRETE SHALL BE INSTALLED USING "SET-3G" ADHESIVE ANCHOR AS MANUFACTURED BY SIMPSON STRONG-TIE ANCHOR SYSTEMS. INSTALL IN STRICT ACCORDANCE WITH I.C.C. REPORT NO. ESR-4057, INCLUDING STANDARD EMBEDMENT REQUIREMENTS U.O.N. PROPOSED SUBSTITUTIONS SHALL BE SUBMITTED FOR REVIEW WITH I.C.C. OR IAPMO UES REPORTS INDICATING EQUIVALENT OR GREATER LOAD CAPACITIES. SPECIAL INSPECTION OF INSTALLATION IS REQUIRED.

WITH A 180 DEGREE BEND AND A 6" EXTENSION AROUND THE VERTICAL REINFORCING BARS IN THE OUTER FACE OF THE CHIMNEY. EACH STRAP SHALL BE FASTENED TO THE JOISTS OR BLOCKING WITH A MINIMUM OF (2) 1/2" DIAMETER BOLTS.

STEEL

23. STRUCTURAL STEEL DESIGN, FABRICATION, AND ERECTION SHALL BE BASED ON THE LATEST EDITIONS OF THE A.I.S.C. SPECIFICATIONS AND CODES:

A. AISC - STEEL CONSTRUCTION MANUAL, 15TH EDITION
B. 2014 RCSC SPECIFICATION FOR STRUCTURAL JOINTS USING HIGH STRENGTH BOLTS.

24. STRUCTURAL STEEL, ALL OTHER ROLLED SHAPES SHALL CONFORM TO ASTM A36, Fy = 36 KSI. STEEL PLATE SHALL CONFORM TO ASTM A36, Fy = 36 KSI. CONNECTION BOLTS SHALL CONFORM TO ASTM A307. ANCHOR BOLTS SHALL CONFORM TO ASTM F1554 GRADE 36, Fy = 36 KSI.

25. ALL A307 CONNECTION BOLTS SHALL BE PROVIDED WITH LOCK WASHERS UNDER NUTS OR SELF-LOCKING NUTS. ALL BOLT HOLES SHALL BE STANDARD SIZE UNLESS OTHERWISE NOTED.

WOOD

26. FRAMING LUMBER: SHALL BE KILN DRIED OR MC-19 (MOISTURE CONTENT LESS THAN 19%), AND GRADED AND MARKED IN CONFORMANCE WITH W.C.L.I.B. STANDARD NO. 17 GRADING RULES FOR WEST COAST LUMBER. FURNISH TO THE FOLLOWING MINIMUM STANDARDS:

JOISTS (2X, 3X, AND 4X MEMBERS)	DOUGLAS FIR OR HEM-FIR NO. 2
BEAMS AND STRINGERS (INCLUDING 6 X AND LARGER MEMBERS)	DOUGLAS FIR NO. 1
POSTS AND TIMBERS	DOUGLAS FIR NO. 1
STUDS, PLATES & MISCELLANEOUS LIGHT FRAMING (AS NOTED ON PLANS / DETAILS)	DOUGLAS FIR OR HEM-FIR NO. 2

27. GLUED LAMINATED MEMBERS SHALL BE FABRICATED IN CONFORMANCE WITH ASTM D3737 AND ANSI A190.1 STANDARDS. EACH MEMBER SHALL BEAR AN A.I.T.C. IDENTIFICATION MARK AND SHALL BE ACCOMPANIED BY AN A.I.T.C. CERTIFICATE OF CONFORMANCE. CERTIFICATES OF CONFORMANCE MUST BE MADE AVAILABLE TO BUILDING INSPECTORS. ALL SIMPLE SPAN BEAMS SHALL BE DOUGLAS FIR COMBINATION 24F-V4, Fb = 2,400 PSI, Fv = 240 PSI, E = 1,800 KSI. ALL CANTILEVERED OR CONTINUOUS BEAMS SHALL BE DOUGLAS FIR COMBINATION 24F-V8, Fb = 2,400 PSI, Fv = 240 PSI, E = 1,800 KSI. CAMBER ALL SIMPLE SPAN GLULAM BEAMS TO 5,000' RADIUS UNLESS SHOWN OTHERWISE ON THE PLANS. ALL GLUE LAMINATED COLUMNS SHALL BE DOUGLAS FIR COMBINATION 2, Fc = 1,900 PSI, Fby = 1,800 PSI, Fbx = 1,700 PSI, E = 1,700 KSI (4 LAMS MINIMUM DEPTH).

28. LAMINATED STRAND LUMBER (LSL) SHALL BE DESIGNED AND MANUFACTURED PER ASTM D5456. EACH PIECE SHALL BEAR A STAMP OR STAMPS NOTING THE NAME AND PLANT NUMBER OF THE MANUFACTURER, THE GRADE, AND THE INDEPENDENT INSPECTION AGENCY'S LOGO. ALL LAMINATED STRAND LUMBER SHALL BE MANUFACTURED USING A WATERPROOF ADHESIVE MEETING THE REQUIREMENTS OF ASTM D2559. MINIMUM STRUCTURAL PROPERTIES ARE AS FOLLOWS:

RIM JOISTS AND BLOCKING (1-1/4" MINIMUM THICKNESS AT NON-SHEAR WALLS; SEE SCHEDULE FOR MINIMUM THICKNESS AT SHEAR WALLS):

$$Fb = 1700\ PSI,\ E = 1.3 \times 10^6\ PSI,\ Fv = 400\ PSI$$

DESIGN SHOWN ON PLANS IS BASED ON MATERIALS MANUFACTURED BY THE WEYERHAEUSER CORPORATION. ALTERNATE MANUFACTURERS MAY BE USED SUBJECT TO REVIEW AND APPROVAL BY THE ARCHITECT AND STRUCTURAL ENGINEER.

29. WOOD I-JOIST DESIGN SHOWN ON PLANS IS BASED ON JOISTS MANUFACTURED BY THE WEYERHAEUSER CORPORATION. ALTERNATE I-JOIST MANUFACTURERS MAY BE USED SUBJECT TO REVIEW AND APPROVAL BY THE ARCHITECT AND STRUCTURAL ENGINEER. ALTERNATE JOIST HANGERS AND OTHER HARDWARE MAY BE SUBSTITUTED FOR ITEMS SHOWN PROVIDED THEY HAVE I.C.C. OR IAPMO UES APPROVAL FOR EQUAL OR GREATER LOAD CAPACITIES. ALL JOIST HANGERS AND OTHER HARDWARE SHALL BE COMPATIBLE IN SIZE WITH WOOD JOIST PROVIDED. GLUE FLOOR JOISTS TO SHEATHING AS REQUIRED BY THE JOIST MANUFACTURER.

30. PREFABRICATED CONNECTOR PLATE WOOD ROOF TRUSSES SHALL BE DESIGNED BY THE MANUFACTURER IN ACCORDANCE WITH IBC SECTION 2303.4 AND ANSI/TPI 1-2014 "NATIONAL DESIGN STANDARD FOR METAL PLATE CONNECTED WOOD TRUSS CONSTRUCTION" FOR THE SPANS AND CONDITIONS SHOWN ON THE PLANS. TRUSSES SHALL BE HANDLED, INSTALLED, AND BRACED PER "HIB 91" PER THE TRUSS PLATE INSTITUTE. LOADING SHALL BE AS FOLLOWS:

TOP CHORD SNOW LOAD	25 PSF
TOP CHORD DEAD LOAD	17 PSF
BOTTOM CHORD LIVE LOAD	10 PSF (NOT INCLUDED IN TOTAL)
BOTTOM CHORD DEAD LOAD	8 PSF
TOTAL LOAD	50 PSF
NET WIND UPLIFT (TOP CHORD)	10 PSF

THE LOADS ABOVE SHALL BE INCREASED TO THE FOLLOWING IF THE TRUSSES MEET THE DESCRIPTION OF AN "UNINHABITABLE ATTIC WITH LIMITED STORAGE" AS DEFINED IN FOOTNOTE J OF IBC TABLE 1607.1:

BOTTOM CHORD LIVE LOAD	20 PSF - INCLUDE IN TOTAL
BOTTOM CHORD DEAD LOAD	10 PSF

SNOW LOAD DUE TO DRIFTING AND UNBALANCED LOADS SHALL BE INCLUDED PER THE IBC. TOP CHORDS SHALL BE DF LUMBER. UTILIZE A MINIMUM CREEP FACTOR OF 2.0 FOR DEAD AND SUSTAINED LIVE LOADS IN DETERMINING THE TRUSS DEFLECTIONS. MAXIMUM TOTAL DEFLECTION SHALL BE LESS THAN OR EQUAL TO L/240 OF THE TOTAL SPAN AND MAXIMUM LIVE LOAD DEFLECTION SHALL BE LESS THAN OR EQUAL TO L/360 OF THE TOTAL SPAN. PROVIDE ADEQUATE PLIES AND/OR METAL BRACKETS TO ADEQUATELY DISTRIBUTE THE BEARING PRESSURE AT THE ENDS OF THE GIRDER TRUSSES TO THE TOP PLATES OF THE BEARING WALLS SUCH THAT THE BEARING PRESSURE DOES NOT EXCEED 405 PSI. PROVIDE ADDITIONAL TRUSSES (AS REQUIRED) TO CARRY ALL CONCENTRATED LOADS AND MECHANICAL UNITS.

WOOD TRUSSES SHALL UTILIZE I.C.C. OR IAPMO UES APPROVED CONNECTOR PLATES. SUBMIT SHOP DRAWINGS AND DESIGN CALCULATIONS TO THE ARCHITECT AND STRUCTURAL ENGINEER FOR REVIEW PRIOR TO FABRICATION. SUBMITTED DOCUMENTS SHALL BEAR THE STAMP AND SIGNATURE OF A STATE OF WASHINGTON REGISTERED PROFESSIONAL ENGINEER. PROVIDE FOR SHAPES, BEARING POINTS, INTERSECTIONS, HIPS, VALLEYS, ETC., SHOWN ON THE DRAWINGS. EXACT COMPOSITION OF SPECIAL HIP, VALLEY, AND INTERSECTION AREAS (USE OF GIRDER TRUSSES, JACK TRUSSES, STEP-DOWN TRUSSES, ETC.) SHALL BE DETERMINED BY THE MANUFACTURER UNLESS SPECIFICALLY INDICATED ON THE PLANS. PROVIDE ALL TRUSS TO TRUSS AND TRUSS TO GIRDER TRUSS CONNECTION DETAILS AND REQUIRED CONNECTION MATERIALS. PROVIDE FOR ALL TEMPORARY AND PERMANENT TRUSS BRACING AND BRIDGING.

31. TRUSS SUPPLIERS NOTE: THE TRUSS CONFIGURATIONS, INCLUDING DEPTHS AND MEMBER SIZES SHOWN ON THE DRAWINGS, INDICATE THE DESIRED TRUSS CONFIGURATION AND ARE TO BE COMPLIED WITH WHEREVER POSSIBLE. IF A TRUSS MANUFACTURER IS UNABLE TO MEET THE LOAD REQUIREMENTS SPECIFIED WITH THE TRUSS CONFIGURATION INDICATED, THE MANUFACTURER IS TO SUBMIT WRITTEN NOTICE TO THAT EFFECT TO THE ARCHITECT PRIOR TO SUBMITTING A COST PROPOSAL OR BID.

IF A DIFFERENT SYSTEM IS PROPOSED THAT REQUIRES REVISIONS TO PRESENT STRUCTURAL FRAMING OR DETAILS, SUCH SYSTEM SHALL BE CONSIDERED SUBJECT TO THE APPROVAL OF THE OWNER, ARCHITECT, AND STRUCTURAL ENGINEER.

IT IS THE RESPONSIBILITY OF THE GENERAL CONTRACTOR AND TRUSS MANUFACTURER TO VERIFY THE WEIGHT AND LOCATIONS OF ALL MECHANICAL EQUIPMENT PRIOR TO SUBMITTING SHOP DRAWINGS. IT SHALL BE NOTED IN THE TRUSS MANUFACTURER'S BID WHETHER OR NOT AN ALLOWANCE HAS BEEN MADE FOR MECHANICAL UNITS.

TRUSS SHOP DRAWINGS WILL NOT BE REVIEWED WITHOUT CALCULATIONS BEARING THE STAMP AND SIGNATURE OF A STATE OF WASHINGTON REGISTERED PROFESSIONAL ENGINEER.

32. WOOD SHEATHING SHALL BE APA RATED, EXTERIOR GLUE, EXPOSURE 1, IN CONFORMANCE WITH THE REQUIREMENTS FOR THEIR TYPE IN DOC PS-1 OR PS-2. SEE PLANS FOR THICKNESS, PANEL IDENTIFICATION INDEX AND NAILING REQUIREMENTS.

UNLESS OTHERWISE NOTED ON THE PLANS, ROOF AND FLOOR SHEATHING SHALL BE LAID UP WITH FACE GRAIN PERPENDICULAR TO SUPPORTS. ALL FLOOR SHEATHING EDGES SHALL HAVE APPROVED TONGUE-AND-GROOVE JOINTS OR SHALL BE SUPPORTED WITH SOLID BLOCKING. ALLOW 1/8" SPACING AT ALL PANEL EDGES AND ENDS OF FLOOR AND ROOF SHEATHING. TOENAIL BLOCKING TO SUPPORTS WITH (2) 10d-F NAILS AT EACH END, UNLESS OTHERWISE NOTED. AT BLOCKED FLOOR AND ROOF DIAPHRAGMS PROVIDE FLAT 2X BLOCKING AT ALL UNFRAMED PANEL EDGES AND NAIL WITH EDGE NAILING SPACED PER PLANS. WHERE NOT NOTED OTHERWISE, NAIL PANEL EDGES WITH 8d NAILS @ 6" O.C. EDGES, 12" O.C. IN THE FIELD.

33. ALL WOOD EXPOSED TO WEATHER, OR BEARING ON UNPROTECTED CONCRETE BELOW GRADE, OR BEARING ON UNPROTECTED CONCRETE LESS THAN 8" FROM EXPOSED EARTH SHALL BE PRESSURE-TREATED, U.O.N. PRESSURE TREATMENT SHALL BE WITH AN APPROVED PRESERVATIVE CONFORMING TO AMERICAN WOOD PRESERVERS ASSOCIATION U1 AND M4 AND SHALL BE BRANDED WITH A QUALITY CONTROL AGENCY MARK BY THE AWPA OR EQUAL. ALL METAL HARDWARE IN CONTACT WITH TREATED WOOD SHALL BE PROTECTED WITH A G185 GALVANIZED COATING (ZMAX) OR BETTER. ALL NAILS IN TREATED WOOD SHALL BE HOT-DIP GALVANIZED OR BETTER. PROVIDE 2 LAYERS OF 30# ASPHALT IMPREGNATED BUILDING PAPER BETWEEN NON-PRESSURE-TREATED LEDGERS, BLOCKING, ETC., AND CONCRETE.

34. TIMBER CONNECTORS CALLED OUT BY LETTERS AND NUMBERS SHALL BE "STRONG-TIE" BY SIMPSON COMPANY, AS SPECIFIED IN THEIR CATALOG NO. C-C-2021. EQUIVALENT DEVICES BY OTHER MANUFACTURERS MAY BE SUBSTITUTED, PROVIDED THEY HAVE I.C.C. OR IAPMO UES APPROVAL FOR EQUAL OR GREATER LOAD CAPACITIES. CONNECTORS SHALL BE SIZED TO MATCH THE SIZE OF THE FRAMING MEMBERS BEING CONNECTED. PROVIDE NUMBER AND SIZE OF FASTENERS AS SPECIFIED BY MANUFACTURER. CONNECTORS SHALL BE INSTALLED IN ACCORDANCE WITH THE MANUFACTURER'S RECOMMENDATIONS. WHERE CONNECTOR STRAPS CONNECT TWO MEMBERS, PLACE ONE-HALF OF THE NAILS OR BOLTS IN EACH MEMBER. ALL BOLTS IN WOOD MEMBERS SHALL CONFORM TO ASTM A307. PROVIDE WASHERS UNDER THE HEADS AND NUTS OF ALL BOLTS AND LAG SCREWS BEARING ON WOOD. UNLESS NOTED OTHERWISE, ALL NAILS SHALL BE COMMON. ALL SHIMS SHALL BE SEASONED AND DRIED AND THE SAME GRADE (MINIMUM) AS MEMBERS CONNECTED. ALL BOLTS TIGHTENED TO SNUG TIGHT.

35. WOOD FASTENERS:

A. NAIL SIZES SPECIFIED ON DRAWINGS ARE BASED ON THE FOLLOWING SPECIFICATIONS:

DRAWING ID	NAIL NAME	NAIL DIAMETER	NAIL LENGTH
"6d"	6d Common	0.113"	2"
"8d Box"	8d Box	0.113"	2-1/2"
"8d"	8d Common	0.131"	2-1/2"
"10d-F"	10d Framer	0.131"	3"
"10d"	10d Shear	0.148"	2-1/4"
"16d"	16d Sinker	0.148"	3-1/4"

IF CONTRACTOR PROPOSES THE USE OF ALTERNATE NAILS, THEY SHALL SUBMIT NAIL SPECIFICATIONS TO THE STRUCTURAL ENGINEER (PRIOR TO CONSTRUCTION) FOR REVIEW AND APPROVAL.

B. NAILS - SHEATHING FASTENERS TO FRAMING SHALL BE DRIVEN FLUSH TO FACE OF SHEATHING WITH NO COUNTERSINKING PERMITTED.

C. SCREWS SHALL BE WOOD SCREWS OF THE DIAMETER AND LENGTH NOTED ON THE DRAWINGS. SDS FASTENERS ARE SIMPSON STRONG DRIVE SCREWS.

D. HOT DIPPED GALVANIZED NAILS, BOLTS AND METAL PLATES - ALL NAILS, BOLTS AND METAL PLATES IN CONTACT WITH PRESSURE TREATED (INCLUDING FIRE-RETARDANT TREATED) LUMBER SHALL BE HOT DIPPED GALVANIZED.

36. WOOD FRAMING NOTES: THE FOLLOWING APPLY UNLESS OTHERWISE SHOWN ON THE PLANS:

A. ALL WOOD FRAMING DETAILS NOT SHOWN OTHERWISE SHALL BE CONSTRUCTED TO THE MINIMUM STANDARDS OF THE IBC. MINIMUM NAILING, UNLESS OTHERWISE NOTED, SHALL CONFORM TO IBC TABLE 2304.10.1. COORDINATE THE SIZE AND LOCATION OF ALL OPENINGS WITH MECHANICAL AND ARCHITECTURAL DRAWINGS. PROVIDE WASHERS UNDER THE HEADS AND NUTS OF ALL BOLTS AND LAG SCREWS BEARING ON WOOD. TIGHTEN BOLTS AND LAG SCREWS SNUGLY AGAINST WOOD FRAMING AFTER WOOD HAS REACHED SPECIFIED MOISTURE CONTENT.

B. WALL FRAMING: ALL BEARING AND SHEAR WALLS SHOWN AND NOT OTHERWISE NOTED SHALL BE 2 x 6 STUDS @ 16" O.C. AT INTERIOR WALLS AND 2 x 8 @ 16" O.C.

GENERAL STRUCTURAL NOTES

(The following apply unless shown otherwise on the plans)

ABBREVIATIONS

@	At	L	Angle
d	Penny (Nails)	LB.	Pound
∅	Diameter	LL	Live Load
°	Degrees	LLH	Long Leg Horizontal
...#	Pounds	LLV	Long Leg Vertical
#...	Number	LONGIT.	Longitudinal
		LT. WT.	Lightweight
(A)	Above		
A.B.	Anchor Bolt	MAX.	Maximum
ADD'L	Additional	MECH.	Mechanical
ALT.	Alternate	MEZZ.	Mezzanine
APPROX.	Approximate	MF	Moment Frame
ARCH.	Architect	MFR.	Manufacturer
		MIN.	Minimum
(B)	Below	MISC.	Miscellaneous
B/	Bottom of	MK.	Mark
BF	Braced Frame		
BLKG.	Blocking	(N)	New
BLDG.	Building	N.	North
BM.	Beam	N.S.	Near Side
BOT.	Bottom	NOM.	Nominal
BRG.	Bearing	NTS	Not to Scale
BTWN.	Between		
		O.C.	On Center
CL or ℄	Centerline	O.D.	Outside Diameter
C	Camber	O.F.	Outside Face
CIP	Cast In Place	O.H.	Overhang
C.J.	Construction Joint or Control Joint	OPNG.	Opening
CJP	Complete Joint Penetration	OPP.	Opposite
CLG.	Ceiling		
CLR.	Clear	PAF	Ponder Actuated Fastener
CMU	Concrete Masonry Unit	PC	Precast
COL.	Column	PERM.	Permanent
CONC.	Concrete	PERP.	Perpendicular
CONN.	Connections	PJP	Partial Joint Penetration
CONST.	Construction	PL or ℄	Plate
CONT.	Continuous	PLF	Pounds per linear Foot
CSK.	Countersink	PLYWD	Plywood
		PREFAB.	Prefabricated
DBA	Deformed Bar Anchor	PSF	Pounds per Square Foot
DBL.	Double	PSI	Pounds per Square Inch
DEG.	Degree	P.T. or PT	Post-Tensioning
DF	Doug Fir-Larch	P/T	Pressure-Treated
DIA.	Diameter		
DIAG.	Diagonal	RAD.	Radius
DIAPH.	Diaphragm	REF.	Reference
DIM.	Dimension	REINF.	Reinforce or Reinforcement
DN.	Down	REQD.	Required
DO	Ditto	REV.	Revise
DTL.	Detail	R.O.	Rough Opening
DTP	Double Top Plate		
DWG.	Drawing	S.	South
		SCH. or SCHED.	Schedule
(E)	Existing	SECT.	Section
E.	East	SHT.	Sheet
EA.	Each	SIM.	Similar
E.F.	Each Face	SOG	Slab On Grade
EL.	Elevation	SPEC.	Specification
ELEV.	Elevator	SQ.	Square
EMBED.	Embedment Length	SQ. FT.	Square Feet
ENGR.	Engineer	SQ. IN.	Square Inch(es)
EQ.	Equal	SPF	Spruce-Pine-Fir
E.W.	Each Way	S.S.	Stainless Steel
EXP.	Expansion	STD.	Standard
EXT.	Exterior	STIFF.	Stiffener
		STL.	Steel
FDN.	Foundation	STR.	Structural
FIN.	Finish	SUB.	Substitute
FLR.	Floor	SYM.	Symmetrical
FRP	Fiber Reinforced Polymer		
F.S.	Far Side	T/	Top of
FT.	Foot or Feet	T&B	Top and Bottom
FTG.	Footing	T&G	Tongue & Groove
		TEMP.	Temporary
GA.	Gauge	THRU	Through
GALV.	Galvanized	T.O.C.	Top of Concrete
GL.	Glue Laminated	T.O.S.	Top of Steel
GWB	Gypsum Wall Board	T.O.W.	Top of Wall
		TRANS.	Transverse
HDG	Hot Dipped Galvanized	TS	Tube Steel
HDR.	Header	TYP.	Typical
HF	Hem Fir		
HGR.	Hanger	U.O.N.	Unless Otherwise Noted
HORIZ.	Horizontal		
HSS	Hollow Structural Section	VERT.	Vertical
HT.	Height	VIF	Verify in Field
I.D.	Inside Diameter	W.	West
I.F.	Inside Face	W/ or w/	With
IN.	Inch	W.H.S.	Welded Headed Stud
INFO.	Information	W/O	Without
INT.	Interior	W.P.	Work Point
		W.T.S.	Welded Threaded Stud
JT.	Joint	WWF	Welded Wire Fabric
K	Kips	X SECT.	Cross Section
KSF	Kips per Square Foot	X-STR	Extra Strong
KSI	Kips per Square Inch	XX-STR	Double Extra Strong

QUANTUM
CONSULTING ENGINEERS
1511 THIRD AVENUE
SUITE 323
SEATTLE, WA 98101
TEL 206.957.3900
FAX 206.957.3901
www.quantumce.com

SANDRO K. KODAMA
STATE OF WASHINGTON
36613
REGISTERED
PROFESSIONAL ENGINEER

DESIGN	MDA
DRAWN	TA
CHECKED	SKK
SHEET ISSUE DATE	03/04/2022
DRAWING SETS	
PERMIT SET	03/04/2022
1 PERMIT COMMENTS	07/29/2022

REVISIONS

Stuart Silk Architects

2400 N. 45th Street
Seattle, WA 98103

WWW.STUARTSILK.COM

BRINDLEY RESIDENCE

PARCEL #
320600050
78XX 79TH AVE SE
MERCER ISLAND,
WA 98040

PERMIT SET

GENERAL STRUCTURAL NOTES

S1.1

File: 483-1001.dwg Plotted: 07/29/22 1:39 pm

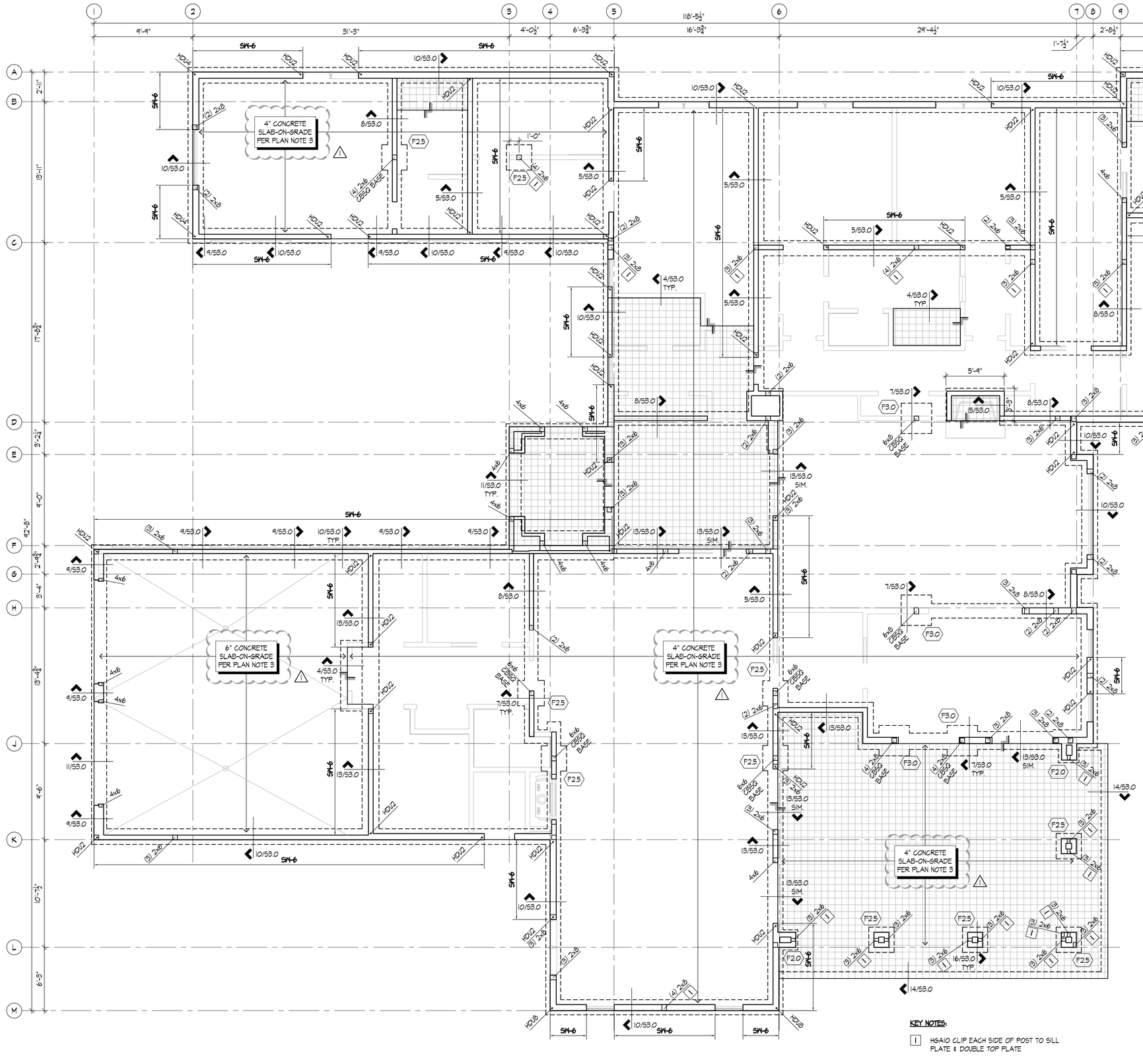

FOUNDATION PLAN

SCALE: 1/4" = 1'-0"

FOUNDATION PLAN NOTES:

1. ALL DIMENSIONS AND ELEVATIONS ON THE STRUCTURAL PLANS ARE FOR GENERAL INFORMATION ONLY AND SHALL BE VERIFIED BY THE CONTRACTOR WITH THE ARCHITECTURAL DRAWINGS BEFORE CONSTRUCTION BEGINS. ANY DISCREPANCIES SHALL BE BROUGHT TO THE ATTENTION OF THE ARCHITECT AND ENGINEER IMMEDIATELY.
2. SEE SHEETS S1.0 AND S1.1 FOR GENERAL STRUCTURAL NOTES AND ABBREVIATIONS. SEE SHEET S3.0 FOR TYPICAL CONCRETE AND FOUNDATION DETAILS. SEE SHEET S4.0 FOR TYPICAL WOOD DETAILS.
3. SLAB-ON-GRADE SHALL BE 4" OR 6" THICK (AS NOTED ON PLAN) CONCRETE REINFORCED WITH #4 @ 16" O.C. EACH WAY AT MID-DEPTH, U.O.N. SEE ARCHITECTURAL DRAWINGS FOR ADDITIONAL INFORMATION REGARDING SUB-GRADE MOISTURE BARRIER AND ELEVATIONS, ETC.
4. FOR SLAB-ON-GRADE JOINTS, SEE DETAIL 2/S3.0.
5. ALL WOOD BEARING ON UNPROTECTED CONCRETE, EXPOSED TO WEATHER, OR WITHIN 8" OF FINISHED GRADE SHALL BE PRESSURE-TREATED, U.O.N.
6. FOR SILL PLATE ANCHOR BOLT LAYOUT TO CONCRETE FOUNDATION WALLS AND SLABS, SEE DETAIL 1/S4.0.
7. POSTS INDICATED ARE AT THIS LEVEL. ALL POSTS NOT SPECIFIED SHALL BE (2) 2x U.O.N. SOLID SAWN MEMBERS OF EQUIVALENT SIZE MAY BE SUBSTITUTED FOR BUILT-UP MEMBERS (SUCH AS A 4x6 FOR (3) 2x4).
8. Fx.x INDICATES SPREAD FOOTING TYPE, SEE 12/S3.0 FOR SCHEDULE.
9. SW-x INDICATES SHEAR WALL AT THIS LEVEL. SEE SHEAR WALL SCHEDULE 8/S4.0 FOR SHEATHING, BLOCKING, NAILING, AND ANCHOR BOLT REQUIREMENTS. ALL EXTERIOR WALLS SHALL BE SHEATHED PER SW-6 CRITERIA U.O.N.
10. HDUx INDICATES HOLDOWN TO CONCRETE FOUNDATION WALLS OR FOOTINGS. SEE 12/S4.0 FOR HOLDOWN DETAIL. USE MIN. (2) 2x POST U.O.N.

KEY NOTES:

1. HGA10 CLIP EACH SIDE OF POST TO SILL PLATE & DOUBLE TOP PLATE

LEGEND:

- Fx.x — INDICATES SPREAD FOOTING. SEE 12/S3.0 FOR SCHEDULE
- INDICATES FOOTING
- INDICATES FOUNDATION WALL, WOOD BEARING WALL OR SHEAR WALL
- SW-x — INDICATES SHEAR WALL TYPE AT THIS LEVEL. SEE PLAN NOTE 9
- INDICATES WOOD BEARING OR SHEAR WALL AT THIS LEVEL. SEE PLAN NOTE 9
- INDICATES NON-BEARING/ NON-SHEAR WALL AT THIS LEVEL
- INDICATES HOLDOWN TYPE AT THIS LEVEL. SEE PLAN NOTE 10
- RECESSED SLAB SEE DETAIL 4/S3.0

QUANTUM
CONSULTING ENGINEERS
1511 THIRD AVENUE
SUITE 323
SEATTLE, WA 98101
TEL 206.957.3900
FAX 206.957.3901
www.quantumce.com

DESIGN	MDA
DRAWN	TA
CHECKED	SKK
SHEET ISSUE DATE	03/04/2022
DRAWING SETS	
PERMIT SET	03/04/2022
PERMIT COMMENTS	07/29/2022
REVISIONS	

Stuart Silk Architects
2400 N. 45th Street
Seattle, WA 98103
WWW.STUARTSILK.COM

BRINDLEY RESIDENCE

PARCEL #
320600050
78XX 79TH AVE SE
MERCER ISLAND,
WA 98040

PERMIT SET

FOUNDATION PLAN

S2.0

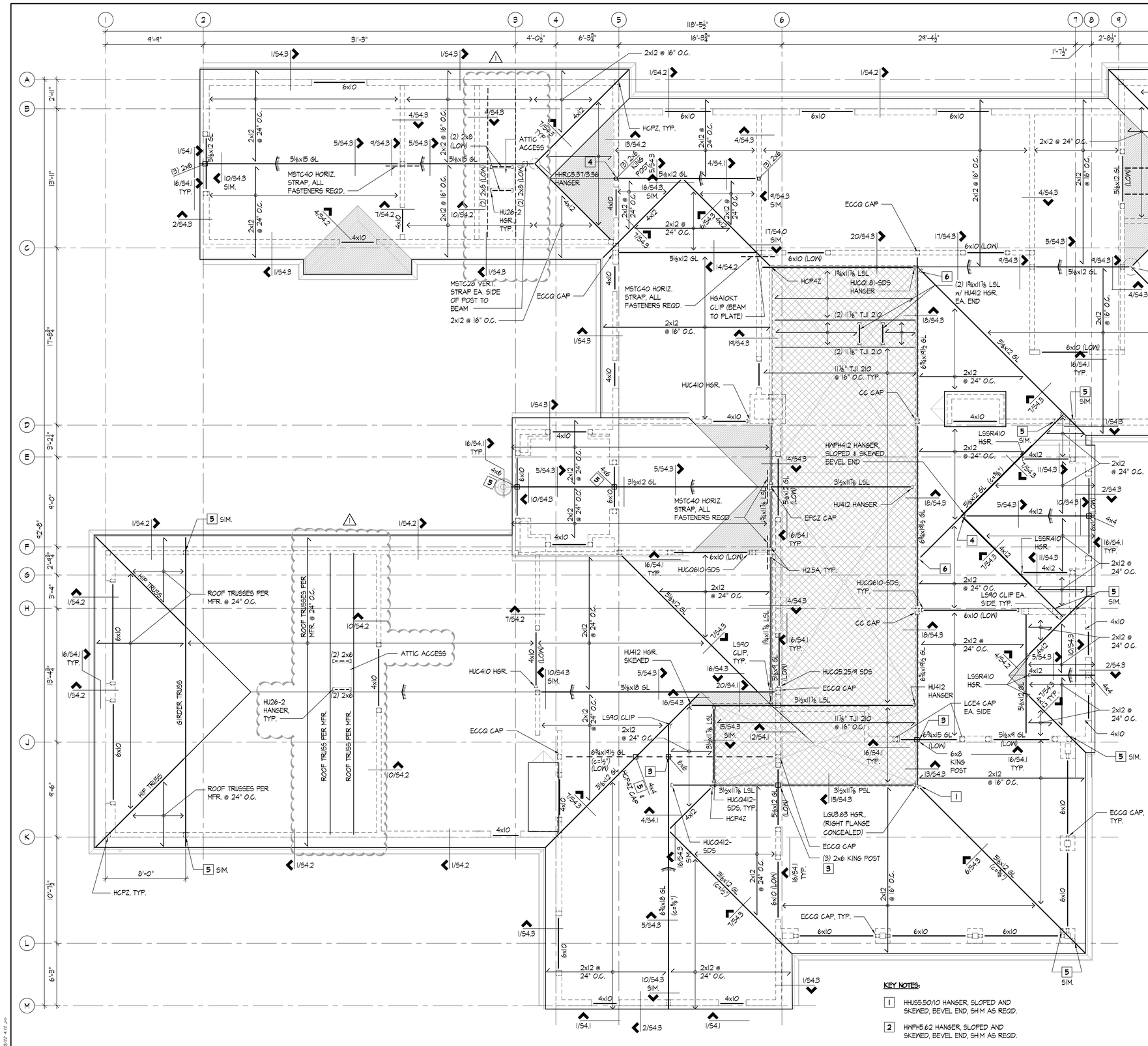

QUANTUM
CONSULTING ENGINEERS
1511 THIRD AVENUE
SUITE 323
SEATTLE, WA 98101
TEL 206.957.3900
FAX 206.957.3901
www.quantumce.com
SANDRO K. KODAMA
STATE OF WASHINGTON
36613
PROFESSIONAL ENGINEER

DESIGN	MDA
DRAWN	TA
CHECKED	SKK
SHEET ISSUE DATE	03/04/2022

DRAWING SETS

PERMIT SET	03/04/2022
⚠1 PERMIT COMMENTS	07/29/2022

REVISIONS

Stuart Silk Architects
2400 N. 45th Street
Seattle, WA 98103
WWW.STUARTSILK.COM

BRINDLEY RESIDENCE

PARCEL #
320600050
78XX 79TH AVE SE
MERCER ISLAND,
WA 98040

PERMIT SET

ROOF FRAMING PLAN

S2.1

File: 482-s201.dwg Plotted: 07/29/22 4:12 pm

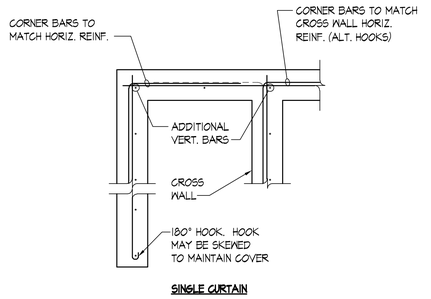

TYPICAL CORNER BAR AND WALL END BAR ARRANGEMENT AT CONCRETE WALLS OR FOOTINGS — SCALE: 3/4"=1'-0" — 1

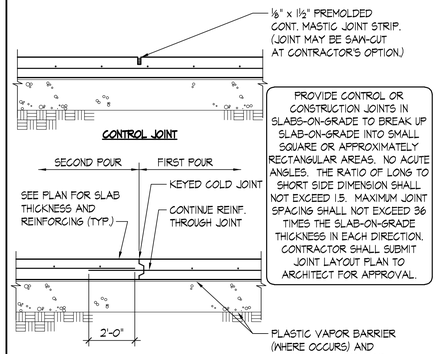

TYPICAL SLAB-ON-GRADE JOINTS — SCALE: 3/4"=1'-0" — 2

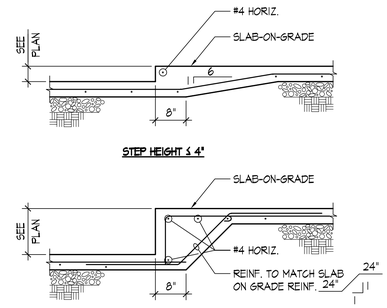

TYPICAL SLAB-ON-GRADE STEP DETAIL — SCALE: 3/4"=1'-0" — 4

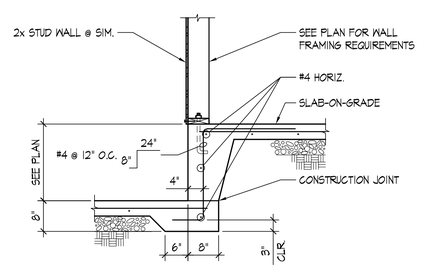

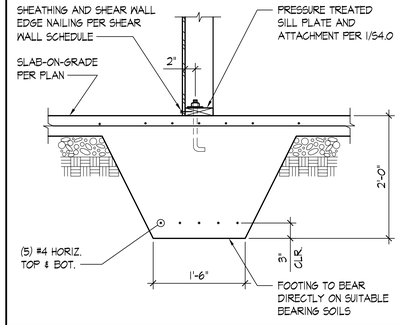

TYPICAL THICKENED SLAB AT SHEAR WALL — SCALE: NONE — 5

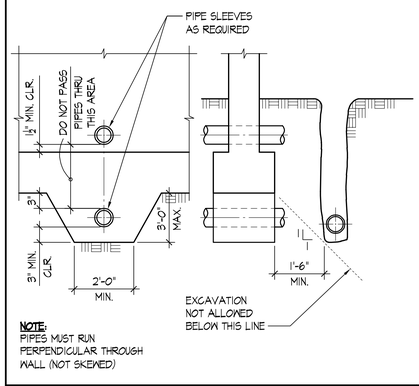

TYPICAL PIPE AND TRENCH LOCATIONS PERPENDICULAR TO FOOTING — SCALE: NONE — 6

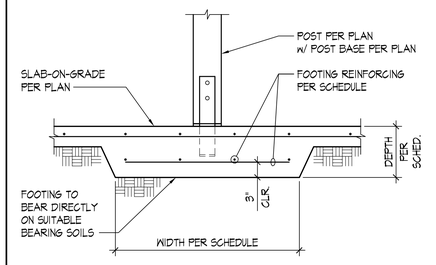

TYPICAL SPREAD FOOTING AT SLAB-ON-GRADE — SCALE: NONE — 7

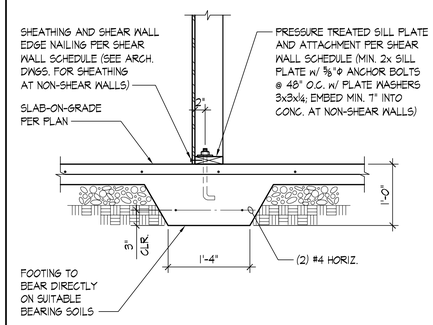

TYPICAL INTERIOR WALL FOUNDATION (THICKENED SLAB) — SCALE: NONE — 8

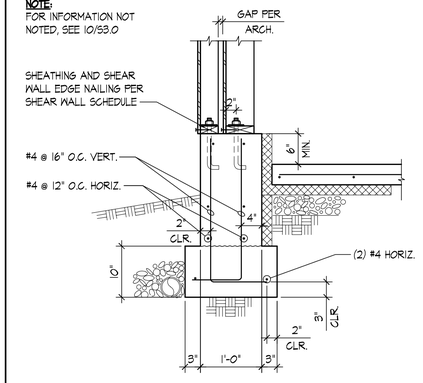

DETAIL — SCALE: NONE — 9

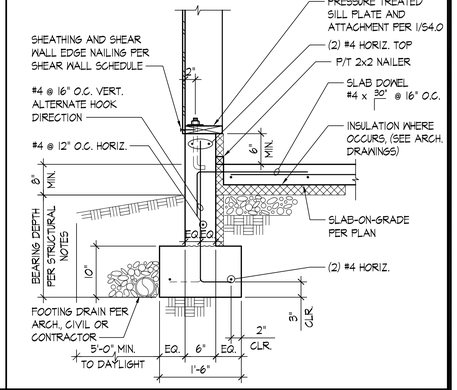

TYPICAL PERIMETER WALL FOUNDATION AT SLAB-ON-GRADE — SCALE: NONE — 10

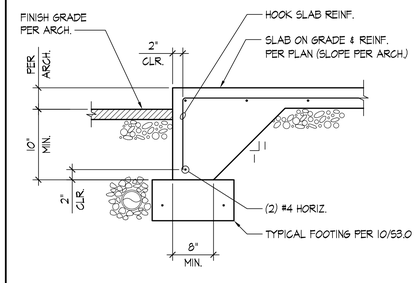

TYPICAL THICKENED SLAB AT DOOR — SCALE: NONE — 11

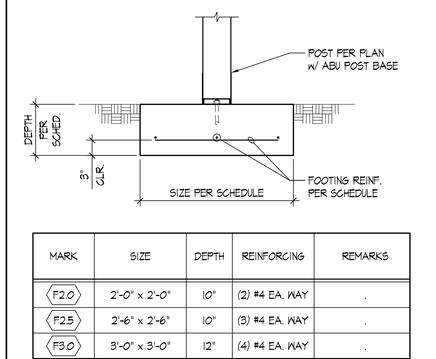

MARK	SIZE	DEPTH	REINFORCING	REMARKS
F2.0	2'-0" x 2'-0"	10"	(2) #4 EA. WAY	.
F2.5	2'-6" x 2'-6"	10"	(3) #4 EA. WAY	.
F3.0	3'-0" x 3'-0"	12"	(4) #4 EA. WAY	.

SPREAD FOOTING SCHEDULE — SCALE: NONE — 12

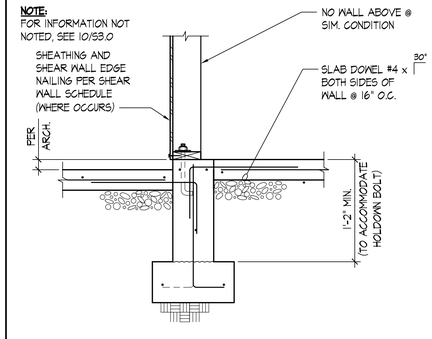

TYPICAL INTERIOR FOUNDATION AT SHEAR WALL — SCALE: NONE — 13

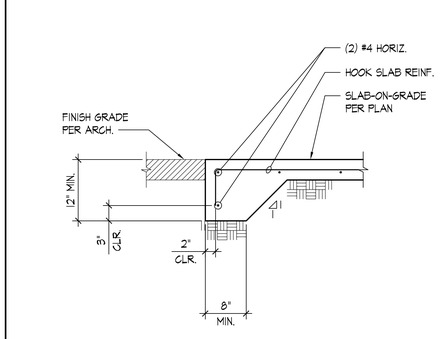

DETAIL — SCALE: NONE — 14

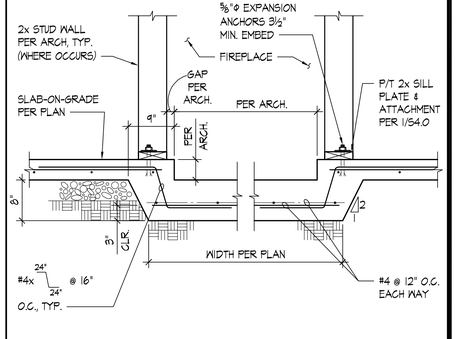

DETAIL — SCALE: 1"=1'-0" — 15

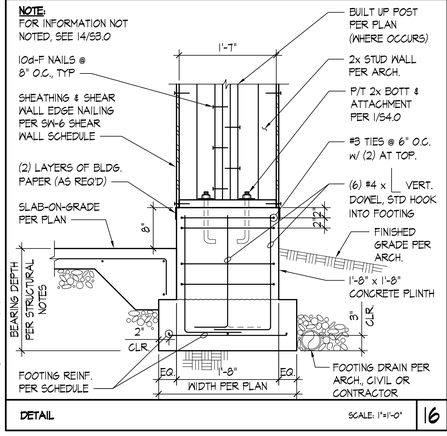

DETAIL — SCALE: 1"=1'-0" — 16

DETAIL — SCALE: 1"=1'-0" — 17

DETAIL — SCALE: 1"=1'-0" — 18

DETAIL — SCALE: 1"=1'-0" — 19

DETAIL — SCALE: 1"=1'-0" — 20

File: 403-s300.dwg Plotted: 07/28/22 1:39 pm

QUANTUM
CONSULTING ENGINEERS
1511 THIRD AVENUE
SUITE 323
SEATTLE, WA 98101
TEL 206.957.3900
FAX 206.957.3901
www.quantumce.com
QCE PROJ. #: 21403.01

SANDRO K. KODAMA — STATE OF WASHINGTON — 36613 — REGISTERED PROFESSIONAL ENGINEER

DESIGN	MDA
DRAWN	TA
CHECKED	SKK
SHEET ISSUE DATE	03/04/2022
DRAWING SETS	
PERMIT SET	03/04/2022
⚠ PERMIT COMMENTS	07/29/2022
REVISIONS	

Stuart Silk Architects
2400 N. 45th Street
Seattle, WA 98103
WWW.STUARTSILK.COM

BRINDLEY RESIDENCE

PARCEL # 320600050
78XX 79TH AVE SE
MERCER ISLAND, WA 98040

PERMIT SET

FOUNDATION DETAILS

S3.0

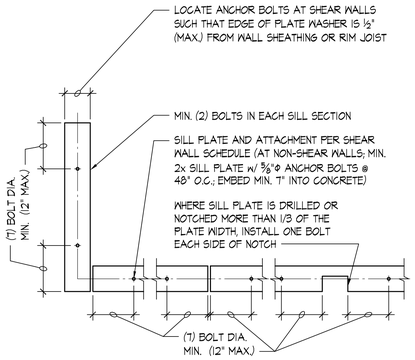

TYPICAL SILL PLATE BOLTING - PLAN VIEW SCALE: NONE | 1

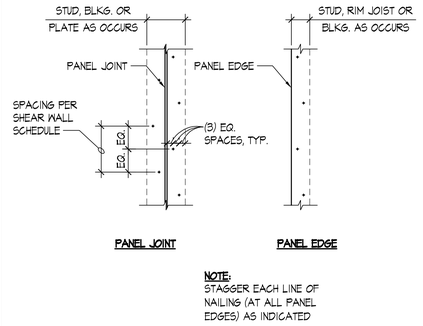

NOTE:
STAGGER EACH LINE OF NAILING (AT ALL PANEL EDGES) AS INDICATED

TYPICAL STAGGERED NAILING SCALE: NONE | 2

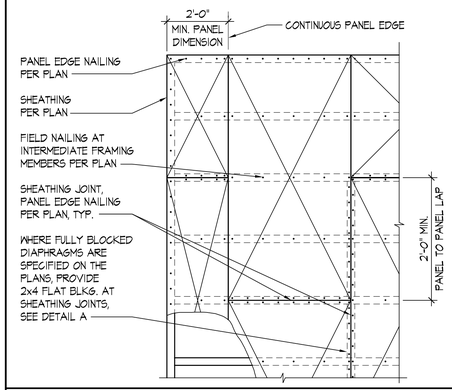

TYPICAL ROOF AND FLOOR DIAPHRAGM SHEATHING SCALE: NONE | 7

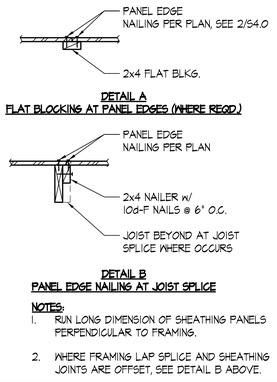

DETAIL A
FLAT BLOCKING AT PANEL EDGES (WHERE REQD.)

DETAIL B
PANEL EDGE NAILING AT JOIST SPLICE

NOTES:
1. RUN LONG DIMENSION OF SHEATHING PANELS PERPENDICULAR TO FRAMING.
2. WHERE FRAMING LAP SPLICE AND SHEATHING JOINTS ARE OFFSET, SEE DETAIL B ABOVE.

NOTES:
1. AT NON-SHEAR WALLS, NAIL STUDS TOGETHER WITH 10d-F NAILS @ 8" O.C.
2. ADDITIONAL STUDS REQUIRED AS NAILERS, ETC. ARE NOT SHOWN.

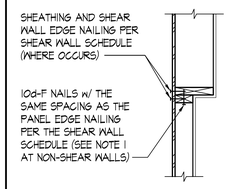

VARYING WALL SIZE

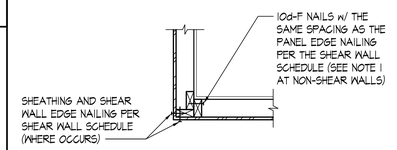

WALL CORNER

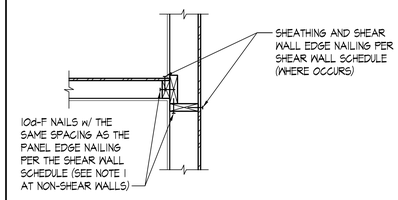

WALL INTERSECTION

TYPICAL WALL INTERSECTIONS - RESIDENTIAL SCALE: NONE | 8

SHEAR WALL SCHEDULE

SHEAR WALL TYPE	SHEAR WALL SHEATHING (1)	PANEL EDGE FRAMING (2)(7)	PANEL EDGE NAILING (3)	BOTTOM PLATE ATTACHMENT: 2x BOTTOM PLATE CONNECTION TO RIM JOIST OR BLOCKING BELOW	BOTTOM PLATE ATTACHMENT: ANCHOR BOLTING OF SILL PLATE TO CONCRETE BELOW (4)(5) — 3x PLATE	BOTTOM PLATE ATTACHMENT: ANCHOR BOLTING OF SILL PLATE TO CONCRETE BELOW (4)(5) — 2x PLATE	TOP PLATE ATTACHMENT: RIM JOIST OR BLOCKING CONNECTION TO TOP PLATE (6) — INTERIOR WALL	TOP PLATE ATTACHMENT: RIM JOIST OR BLOCKING CONNECTION TO TOP PLATE (6) — EXTERIOR WALL
SW-6	15/32" APA ONE-SIDE SHTG.	2x	0.131"Φx2½" @ 6" O.C.	0.148"Φx3¼" @ 6" O.C. (9)	⅝"Φ @ 48" O.C.	⅝"Φ @ 48" O.C.	A35 @ 16" O.C.	LTP4 @ 16" O.C.
SW-4	7/16" APA ONE-SIDE SHTG.	3x OR (2) 2x	0.131"Φx2½" @ 4" O.C. (8)	0.148"Φx3¼" @ 4" O.C. (9)	⅝"Φ @ 48" O.C.	⅝"Φ @ 32" O.C.	A35 @ 16" O.C.	LTP4 @ 16" O.C.

NOTES:

(1) INSTALL PANEL SHEATHING EITHER HORIZONTALLY OR VERTICALLY FOR THE ENTIRE LENGTH OF THE WALL PER PLAN. WALL STUD SPACING SHALL BE 16" O.C. MAXIMUM.

(2) ALL INTERMEDIATE WALL STUDS SHALL BE PER PLAN. PROVIDE BACKING FRAMING AT ALL PANEL EDGES INCLUDING HORIZONTAL BLOCKING PER THE SCHEDULE.

(3) PROVIDE NAILING TO ALL PANEL EDGES, TOP & BOTTOM PLATES AND HORIZONTAL BLOCKING. PROVIDE THE SAME NAILING PATTERN TO EACH MULTIPLE STUD OF THE BUILT-UP HOLD DOWN POST. NAIL PANEL TO INTERMEDIATE FRAMING MEMBERS w/ 0.131"Φ x 2½" @ 12" O.C.

(4) EMBED CAST-IN-PLACE 5/8"Φ ANCHOR BOLTS 7" MIN. (OR EMBED ADHESIVE ANCHOR BOLTS 5 1/2" IN (E) CONCRETE; SEE STRUCTURAL NOTES). PROVIDE PLATE WASHER 3" x 3" x 1/4" AT EACH ANCHOR BOLT. SILL PLATES SHALL BE TREATED PER GENERAL NOTES, AND SHALL BE 2x OR 3x PER THE SCHEDULE. SEE DETAIL 1/S4.0 FOR OTHER REQUIREMENTS.

(5) PROVIDE HOT DIPPED GALVANIZED NAILS, BOLTS, OR METAL PLATES FOR ALL CONNECTORS IN CONTACT WITH PRESSURE TREATED MEMBERS.

(6) PROVIDE 0.131"Φ x 1-1/2" LONG NAILS FOR CLIPS DIRECTLY ATTACHED TO FRAMING MEMBERS; PROVIDE 0.131"Φ x 2-1/2" LONG NAILS FOR CLIPS INSTALLED OVER FLOOR OR WALL SHEATHING ON FRAMING MEMBERS. SEE 6/S4.1 FOR TOP PLATE SPLICE.

(7) ALTERNATIVE TO 3x STUDS AND 3x HORIZ. BLOCKING IS (2) 2x STUDS/BLKG. NAILED TOGETHER WITH 0.148"Φ x 3" LONG NAILS WITH THE SAME SPACING AS THE PANEL EDGE NAILING PER THE SCHEDULE (STAGGER).

(8) STAGGER NAILS PER 2/S4.0.

(9) RIM JOIST/BLOCKING MINIMUM WIDTH OF 1¾". STAGGER NAILS PER 2/S4.0 WHERE SPACING IS LESS THAN 6" O.C.

SHEAR WALL SCHEDULE - 8d NAILS SCALE: NONE | 10

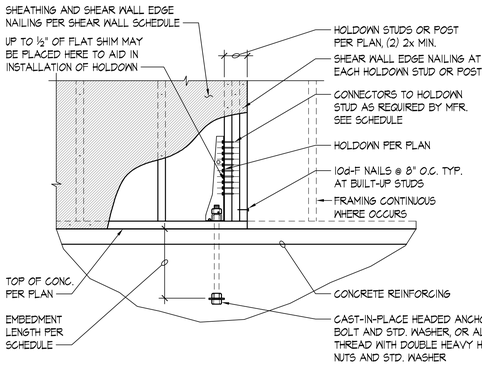

HOLDOWN	ANCHOR BOLT Φ	ANCHOR BOLT IN CONCRETE EMBED LENGTH	CONNECTORS TO HOLDOWN STUDS
HDU2	⅝"Φ	13"	(6) SDS ¼"x2½" SCREWS
HDU4	⅝"Φ	13"	(10) SDS ¼"x2½" SCREWS
HDU8	⅞"Φ	18"	(20) SDS ¼"x2½" SCREWS

NOTE:
PROVIDE HOT DIPPED GALVANIZED NAILS, BOLTS, OR METAL PLATES FOR ALL CONNECTORS IN CONTACT WITH PRESSURE TREATED MEMBERS.

TYPICAL HOLDOWN TO CONCRETE SCALE: NONE | 12

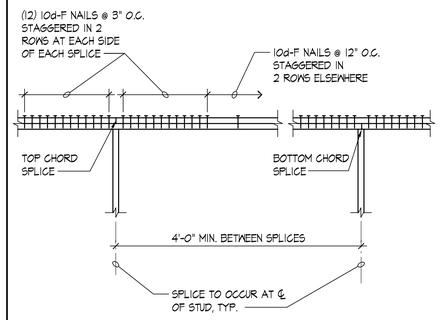

TYPICAL TOP PLATE SPLICE SCALE: NONE | 13

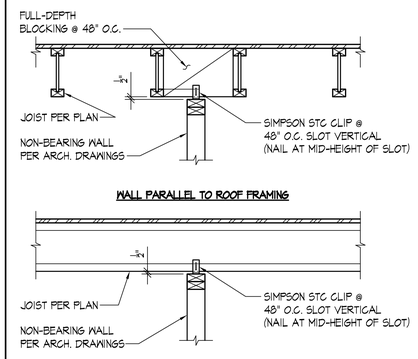

WALL PARALLEL TO ROOF FRAMING

WALL PERPENDICULAR TO ROOF FRAMING

TYPICAL NON-STRUCTURAL WALL SUPPORT (TOP) - I-JOIST SCALE: NONE | 14

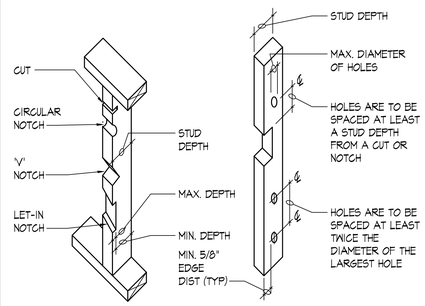

A. GUTTING AND NOTCHING WOOD STUDS
(DO NOT NOTCH MORE THAN 3 ADJACENT STUDS w/o REVIEW BY ENGINEER)

BEARING WALL STUDS:

STUD SIZE	MAX. DEPTH OF SAW CUT OR NOTCH	MIN. DEPTH REMAINING AFTER CUT OR NOTCH
2x4	1⅜"	2-3/8"
2x6	1-3/8"	4-1/8"
2x8	1-1/8"	5-3/8"

NON-BEARING WALL STUDS:

STUD SIZE	MAX. DEPTH OF SAW CUT OR NOTCH	MIN. DEPTH REMAINING AFTER CUT OR NOTCH
2x4	1-1/2"	2"
2x6	2-3/8"	3-1/8"
2x8	3"	4-1/4"

B. HOLES IN WOOD STUDS

BEARING WALL:

STUD SIZE	MAX. DIAMETER OF HOLE
2x4	1-1/2"
2x6	2-3/8"
2x8	3"

NON-BEARING WALL:

STUD SIZE	MAX. DIAMETER OF HOLE
2x4	2-1/4"
2x6	3-3/8"
2x8	4-1/2"

TYPICAL ALLOWABLE HOLES AND NOTCHES IN STUDS SCALE: NONE | 20

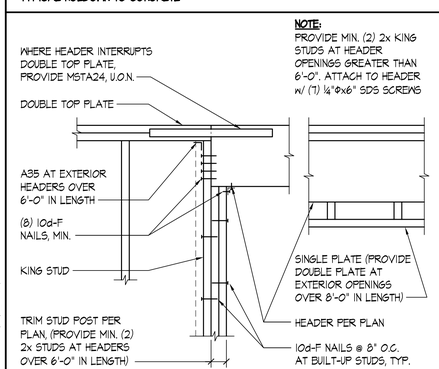

NOTE:
PROVIDE MIN. (2) 2x KING STUDS AT HEADER OPENINGS GREATER THAN 6'-0". ATTACH TO HEADER w/ (7) ¼"Φx6" SDS SCREWS

TYPICAL HEADER SCALE: NONE | 16

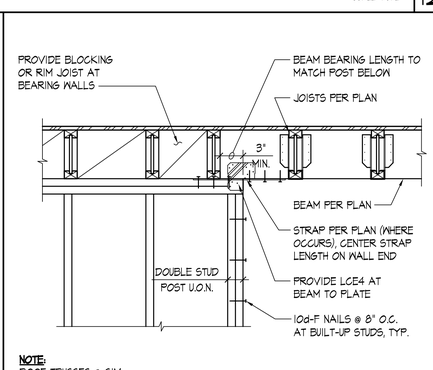

NOTE:
ROOF TRUSSES @ SIM. CONDITION.

TYPICAL FLUSH BEAM SCALE: NONE | 17

DETAIL SCALE: 1"=1'-0" | 18

DETAIL SCALE: 1"=1'-0" | 19

QUANTUM
CONSULTING ENGINEERS
1511 THIRD AVENUE
SUITE 323
SEATTLE, WA 98101
TEL 206.957.3900
FAX 206.957.3901
www.quantumce.com

SANDRO K. KODAMA — STATE OF WASHINGTON — 36613 — REGISTERED PROFESSIONAL ENGINEER

DESIGN	MDA
DRAWN	TA
CHECKED	SKK
SHEET ISSUE DATE	03/04/2022
DRAWING SETS	
PERMIT SET	03/04/2022
⚠ PERMIT COMMENTS	07/29/2022
REVISIONS	

Stuart Silk Architects
2400 N. 45th Street
Seattle, WA 98103
WWW.STUARTSILK.COM

BRINDLEY RESIDENCE

PARCEL #
320600050
78XX 79TH AVE SE
MERCER ISLAND,
WA 98040

PERMIT SET

TYPICAL WOOD DETAILS

S4.0

File: 405-s400.dwg Plotted: 07/28/22 3:30 pm

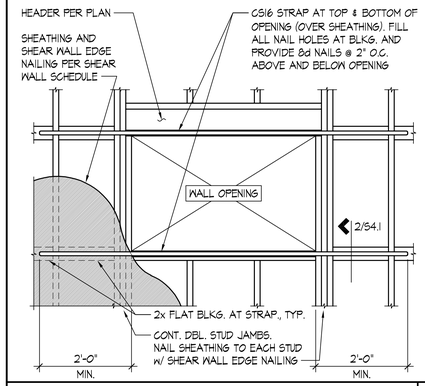

STRAPPING AROUND SHEAR WALL OPENING SCALE: NONE | 1

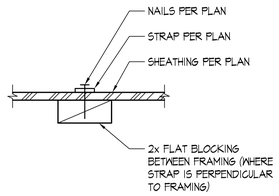

STRAP TO BLOCKING DETAIL SCALE: NONE | 2

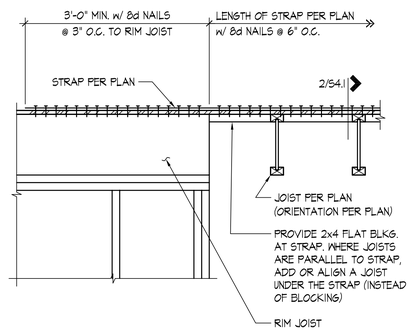

TYPICAL DRAG STRUT DETAIL SCALE: NONE | 3

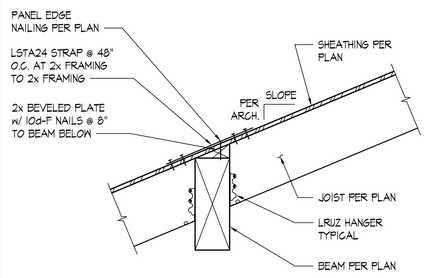

DETAIL SCALE: 1"=1'-0" | 4

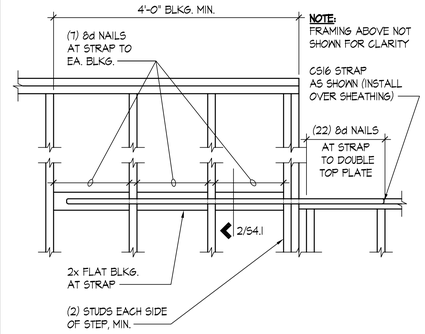

TYPICAL PLATE HEIGHT STEP SCALE: NONE | 5

DETAIL SCALE: 1"=1'-0" | 6

DETAIL SCALE: 1"=1'-0" | 7

DETAIL SCALE: 1"=1'-0" | 8

DETAIL SCALE: 1"=1'-0" | 9

CEILING JOIST SCHEDULE SCALE: NONE | 10

CEILING JOIST SCHEDULE	
SIZE	MAX. SPAN
2x4 @ 24" O.C. 2x4 @ 16" O.C.	8'-0" 9'-2"
2x6 @ 24" O.C. 2x6 @ 16" O.C.	12'-6" 14'-4"
2x8 @ 24" O.C. 2x8 @ 16" O.C.	16'-6" 19'-0"
2x10 @ 24" O.C. 2x10 @ 16" O.C.	21'-2" 24'-3"

NOTES:
CEILING JOIST TABLE BASED ON HF #2, Fb=850 PSI (REPETITIVE MEMBER USE), Fv = 150 PSI E=1.3X10^6 PSI, DEFL. < L/240

ATTIC LIVE LOAD = 10.0 PSF
CEILING DEAD LOAD = 5.0 PSF

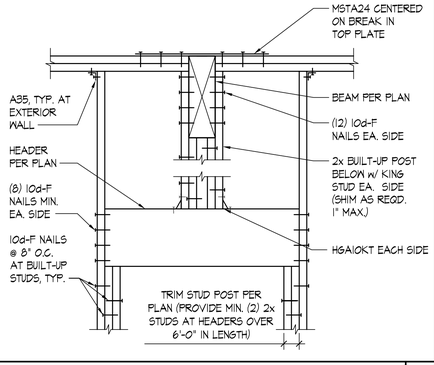

TYPICAL DROP BEAM TO WALL SUPPORT (OVER HEADER) SCALE: NONE | 11

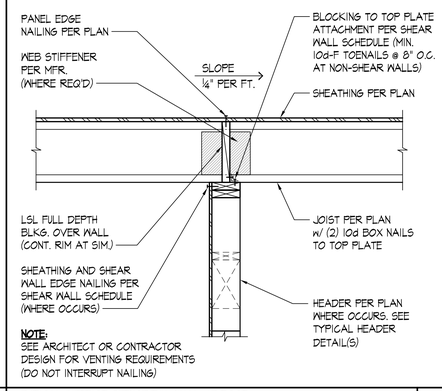

TYPICAL INTERIOR STRUCTURAL WALL AT ROOF - I-JOIST PERPENDICULAR SCALE: NONE | 12

DETAIL SCALE: 1"=1'-0" | 13

DETAIL SCALE: 1"=1'-0" | 14

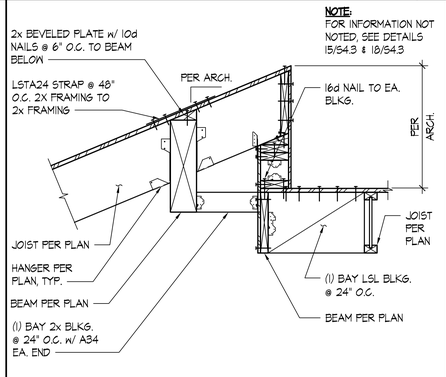

DETAIL SCALE: 1"=1'-0" | 15

DETAIL SCALE: 1"=1'-0" | 16

DETAIL SCALE: 1"=1'-0" | 17

DETAIL SCALE: 1"=1'-0" | 18

DETAIL SCALE: 1"=1'-0" | 19

DETAIL SCALE: 1"=1'-0" | 20

File: 483-s401.dwg Plotted: 07/29/22, 3:30 pm

QUANTUM
CONSULTING ENGINEERS
1511 THIRD AVENUE
SUITE 323
SEATTLE, WA 98101
TEL 206.957.3900
FAX 206.957.3901
www.quantumce.com
QCE PROJ. #: 21483.01

SANDRO K. KODAMA — STATE OF WASHINGTON — 36613 — REGISTERED PROFESSIONAL ENGINEER

DESIGN	MDA
DRAWN	TA
CHECKED	SKK
SHEET ISSUE DATE	03/04/2022
DRAWING SETS	
PERMIT SET	03/04/2022
1 PERMIT COMMENTS	07/29/2022
REVISIONS	

Stuart Silk Architects
2400 N. 45th Street
Seattle, WA 98103
WWW.STUARTSILK.COM

BRINDLEY RESIDENCE

PARCEL # 320600050
78XX 79TH AVE SE
MERCER ISLAND, WA 98040

PERMIT SET

TYPICAL DETAILS

S4.1

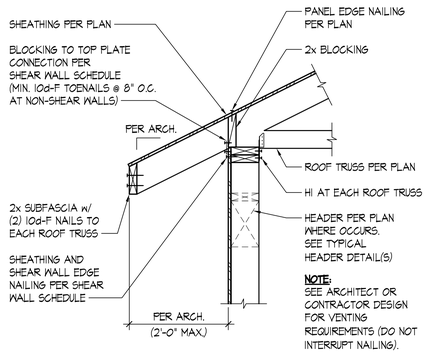

TYPICAL ROOF TRUSS TO EXTERIOR WALL - TRUSS PERPENDICULAR SCALE: NONE | 1

DETAIL SCALE: 1"=1'-0" | 2

DETAIL SCALE: 1"=1'-0" | 3

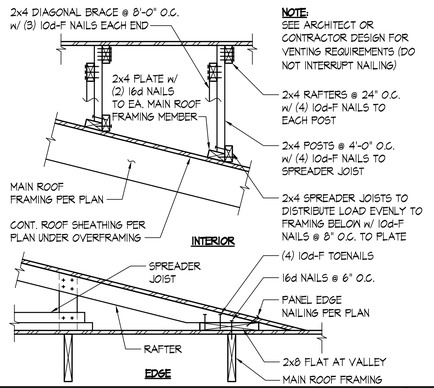

TYPICAL ROOF OVERFRAMING SCALE: NONE | 4

DETAIL SCALE: 1"=1'-0" | 5

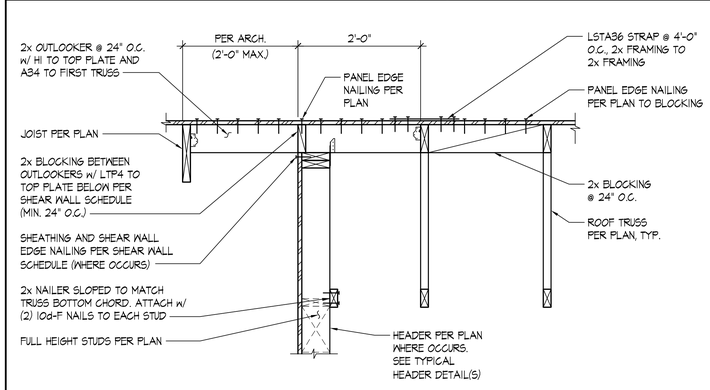

TYPICAL ROOF TRUSS TO INTERIOR WALL - TRUSS AND 2x FRAMING PARALLEL SCALE: NONE | 7

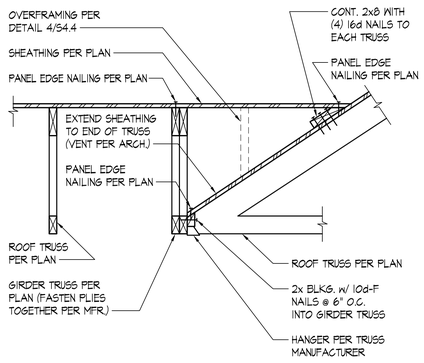

TYPICAL ROOF TRUSS TO GIRDER TRUSS SCALE: NONE | 8

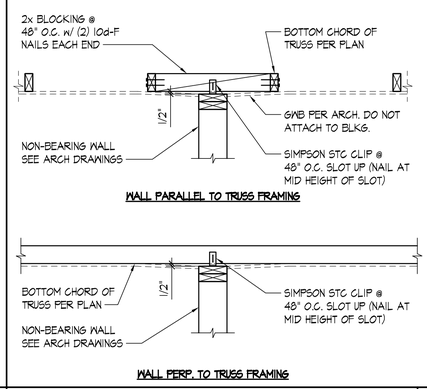

TYPICAL NON-STRUCTURAL WALL SUPPORT (TOP) - TRUSS SCALE: NONE | 9

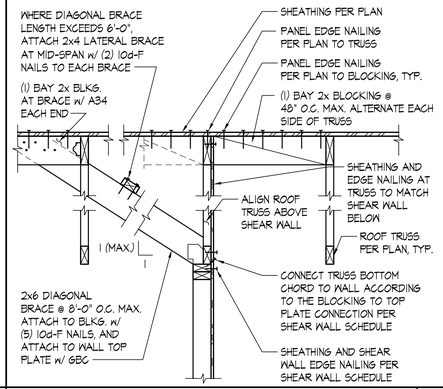

TYPICAL ROOF TRUSS TO INTERIOR SHEAR WALL - TRUSS PARALLEL SCALE: NONE | 10

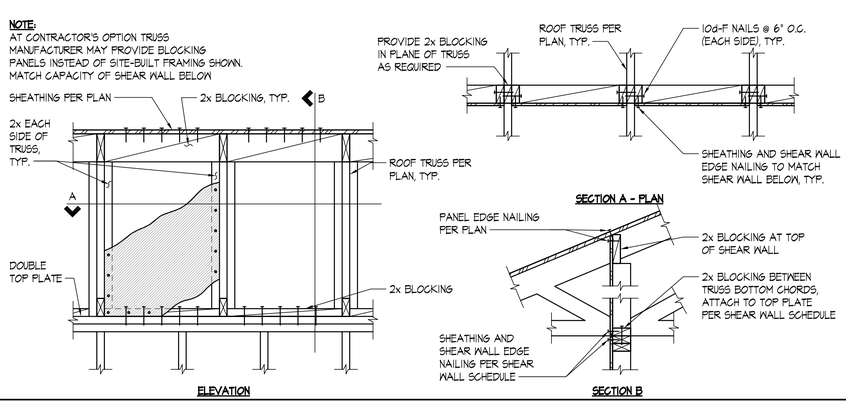

TYPICAL ROOF TRUSS TO SHEAR WALL - TRUSS PERPENDICULAR SCALE: NONE | 12

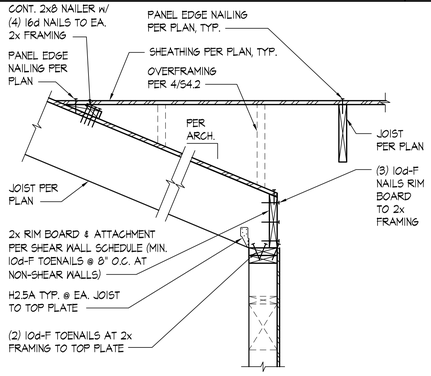

DETAIL SCALE: 1"=1'-0" | 13

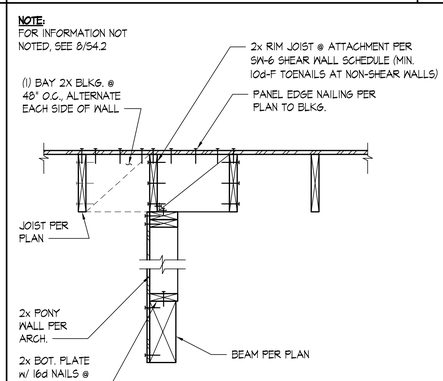

DETAIL SCALE: 1"=1'-0" | 14

DETAIL SCALE: 1"=1'-0" | 15

DETAIL SCALE: 1"=1'-0" | 16

DETAIL SCALE: 1"=1'-0" | 17

DETAIL SCALE: 1"=1'-0" | 18

DETAIL SCALE: 1"=1'-0" | 19

DETAIL SCALE: 1"=1'-0" | 20

File: 482-s402.dwg Revised: 07/28/22 3:30 pm

QUANTUM
CONSULTING ENGINEERS
1511 THIRD AVENUE
SUITE 323
SEATTLE, WA 98101
TEL 206.957.3900
FAX 206.957.3901
www.quantumce.com
QCE PROJ. #: 21482.01

SANDRO K. KODAMA — STATE OF WASHINGTON — 36613 — REGISTERED PROFESSIONAL ENGINEER

DESIGN	MDA
DRAWN	TA
CHECKED	SKK
SHEET ISSUE DATE	03/04/2022
DRAWING SETS	
PERMIT SET	03/04/2022
⚠ PERMIT COMMENTS	07/29/2022
REVISIONS	

Stuart Silk Architects
2400 N. 45th Street
Seattle, WA 98103
WWW.STUARTSILK.COM

BRINDLEY RESIDENCE

PARCEL # 320600050
78XX 79TH AVE SE
MERCER ISLAND, WA 98040

PERMIT SET

TYPICAL TRUSS DETAILS

S4.2

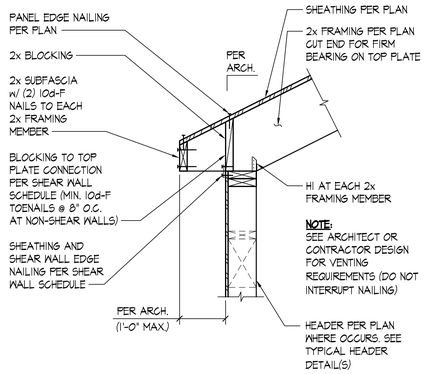

TYPICAL SLOPED ROOF FRAMING TO EXTERIOR WALL - 2x FRAMING PERPENDICULAR — SCALE: NONE — 1

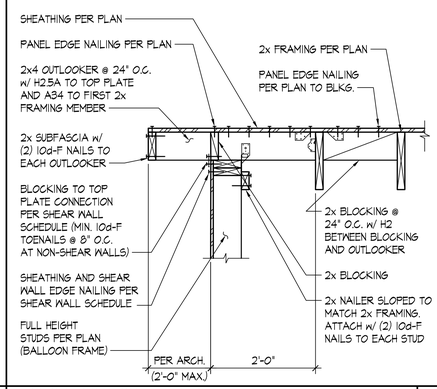

TYPICAL EXTERIOR WALL TO 2x ROOF OUTLOOKER - 2x FRAMING PARALLEL — SCALE: NONE — 2

DETAIL — SCALE: 1"=1'-0" — 3

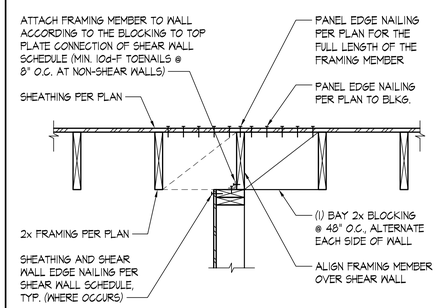

TYPICAL INTERIOR STRUCTURAL WALL AT ROOF - 2x FRAMING PARALLEL — SCALE: NONE — 4

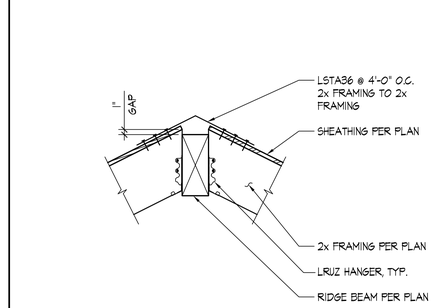

TYPICAL FLUSH RIDGE BEAM - 2x FRAMING PERPENDICULAR — SCALE: NONE — 5

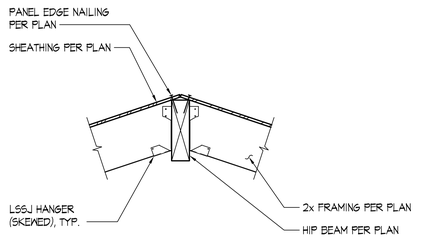

TYPICAL FLUSH HIP BEAM - 2x FRAMING — SCALE: NONE — 6

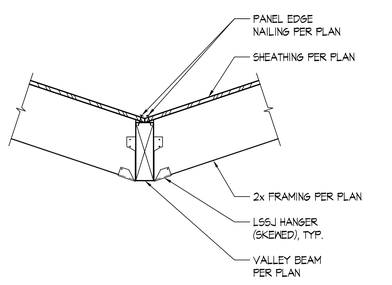

TYPICAL FLUSH VALLEY BEAM - 2x FRAMING — SCALE: NONE — 7

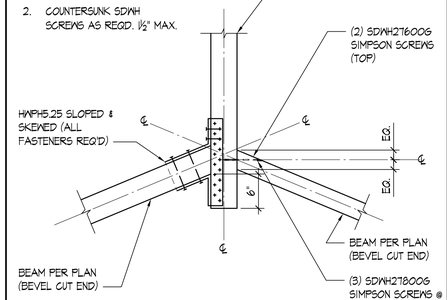

DETAIL — SCALE: NONE — 8

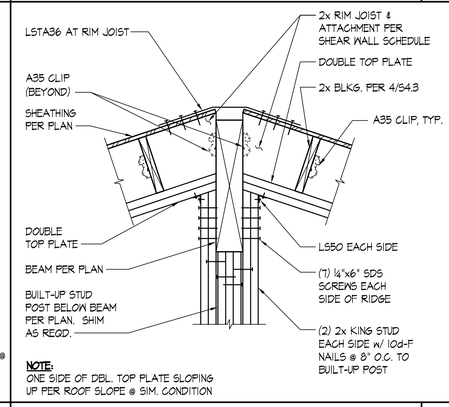

RIDGE BEAM AT INTERIOR WALL — SCALE: NONE — 9

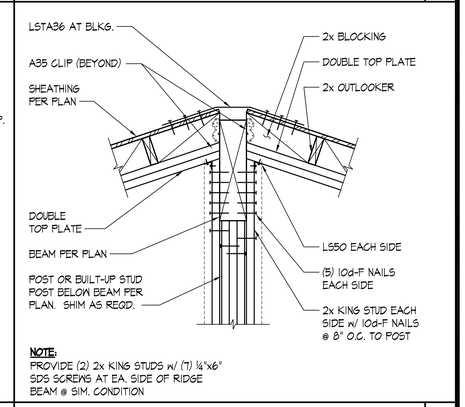

RIDGE BEAM AT EXTERIOR WALL — SCALE: NONE — 10

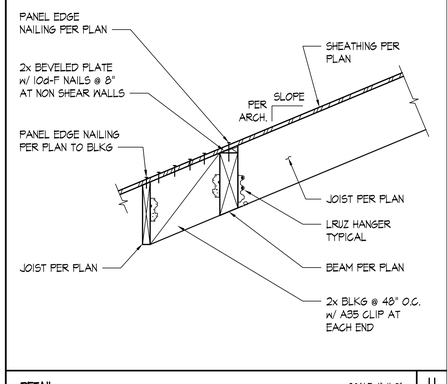

DETAIL — SCALE: 1"=1'-0" — 11

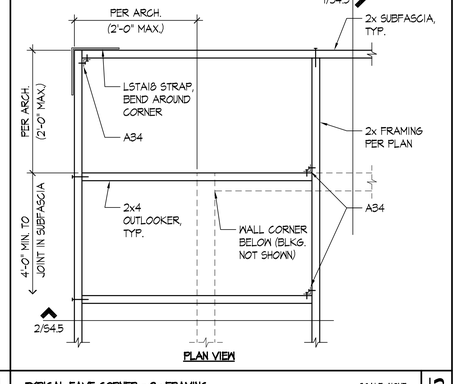

TYPICAL EAVE CORNER - 2x FRAMING — SCALE: NONE — 12

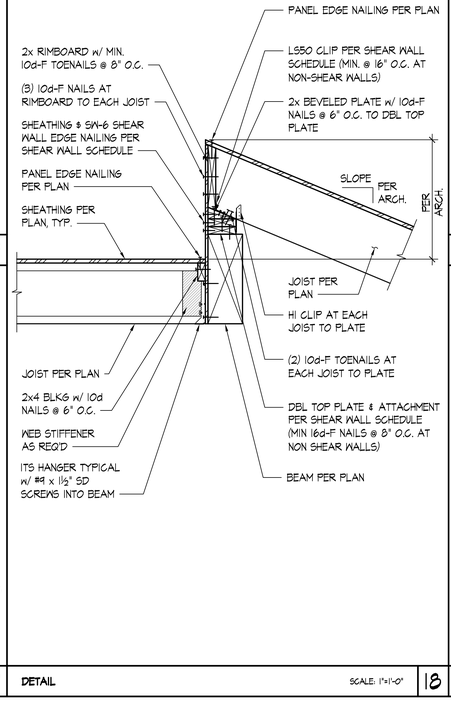

DETAIL — SCALE: 1"=1'-0" — 18

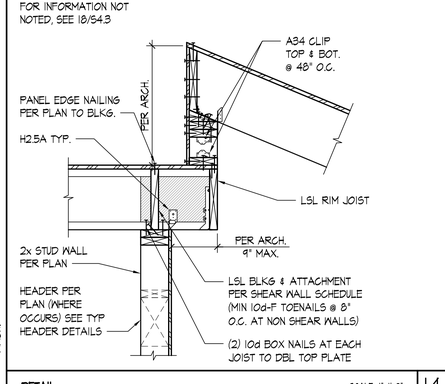

DETAIL — SCALE: 1"=1'-0" — 14

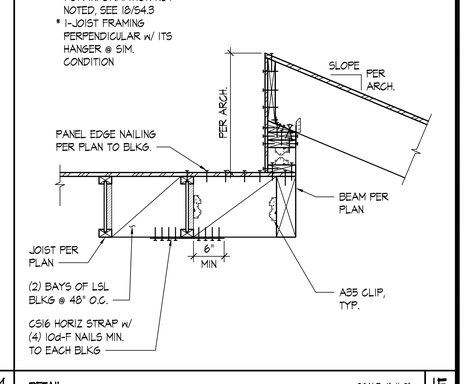

DETAIL — SCALE: 1"=1'-0" — 15

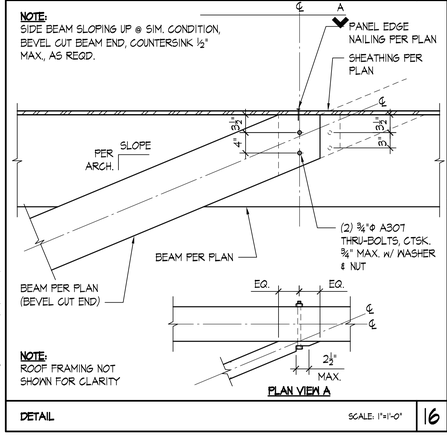

DETAIL — SCALE: 1"=1'-0" — 16

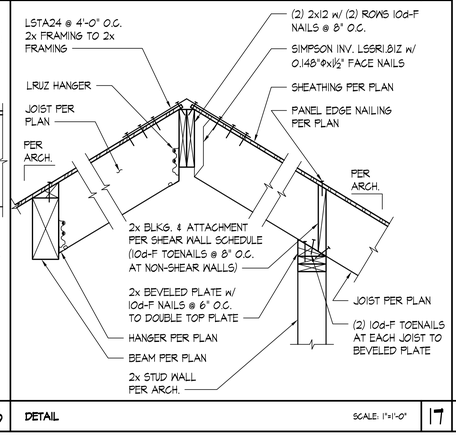

DETAIL — SCALE: 1"=1'-0" — 17

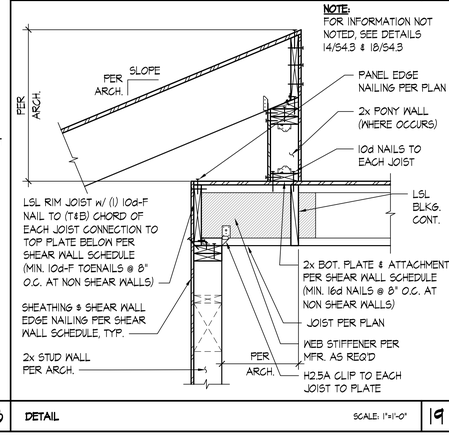

DETAIL — SCALE: 1"=1'-0" — 19

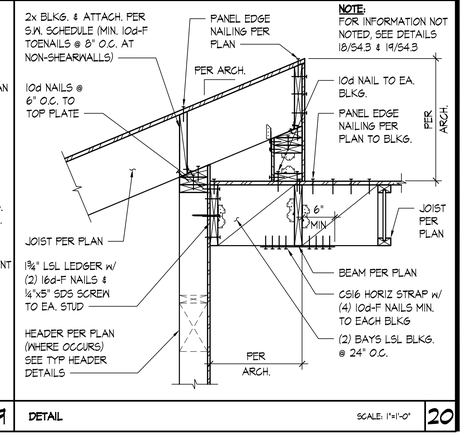

DETAIL — SCALE: 1"=1'-0" — 20

File: A03-A031.dwg Plotted: 07/28/22, 3:30 pm

QUANTUM
CONSULTING ENGINEERS
1511 THIRD AVENUE
SUITE 323
SEATTLE, WA 98101
TEL 206.957.3900
FAX 206.957.3901
www.quantumce.com
QCE PROJ. #: 2148.01
SANDRO K. KODAMA
STATE OF WASHINGTON
16613
REGISTERED
PROFESSIONAL ENGINEER

DESIGN	MDA
DRAWN	TA
CHECKED	SKK
SHEET ISSUE DATE	03/04/2022
DRAWING SETS	
PERMIT SET	03/04/2022
⚠ PERMIT COMMENTS	07/29/2022
REVISIONS	

Stuart Silk Architects
2400 N. 45th Street
Seattle, WA 98103
WWW.STUARTSILK.COM

BRINDLEY RESIDENCE

PARCEL #
320600050
78XX 79TH AVE SE
MERCER ISLAND, WA 98040

PERMIT SET

TYPICAL ROOF DETAILS

S4.3

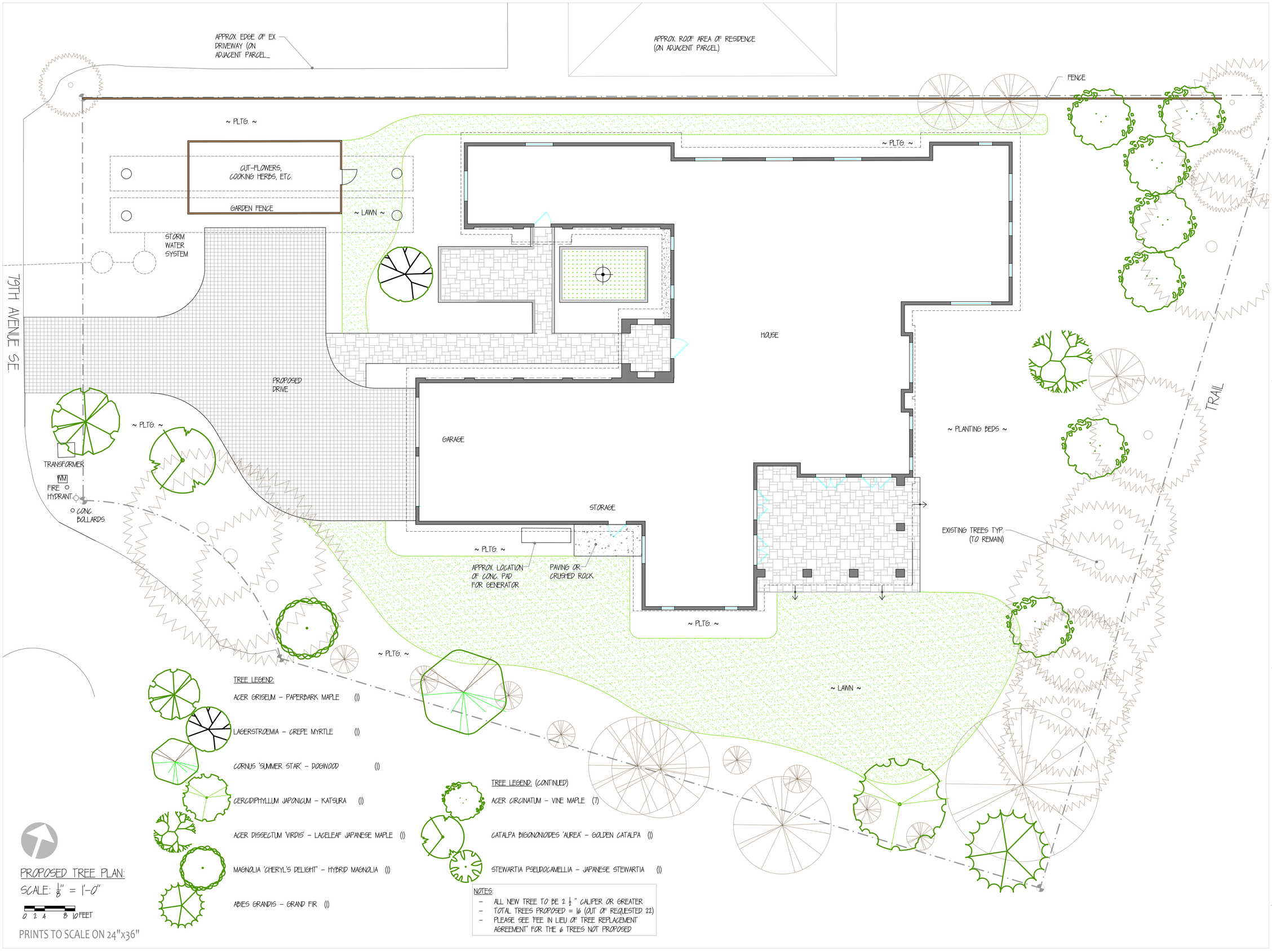

RAGEN & Associates
Distinctive Garden & Container Design
517 E. Pike Street Seattle, WA 98122
p: 206.329.4737 f: 206.329.9926
www.ragenassociates.com

BRINDLEY RESIDENCE

XXXX 79TH AVE SE
MERCER ISLAND, WA 98040

PROPOSED TREE PLAN

DRAWN BY: AB
DATE: 7-29-2022